Design and Development of Hydraulic Rotational Jib Crane

Mr.Ganesh T. Borle
PG Student, Pimpri Chinchwad College of Engineering, SPPU, Pune, Maharashtra, India
gtborle24@gmail.com

Dr . Sanjay S. Lakade
HOD, Mech. Department, Pimpri Chinchwad College of Engineering, SPPU, Pune, Maharashtra, India
sanjay.lakade@pccoepune.org

***Abstract*— In this paper we proposed the novel design of jib crane with a rotational movement of horizontal arm with respect to vertical column in 180° angle and fabricate a rotating hydraulic jib crane for Micro Small Medium Enterprises (MSME sector) and sponsored by TIFAC Institute New Delhi. To make it very general purpose effective so that even small workshop owner can also use it, the rotational hydraulic jib crane is developed to lift load having capacity 1000 kg by using a locally available material, Crane structure consists of chassis, vertical column, horizontal arm, and the hydraulic pump with cylinder assembly. In this project we eliminate all electrical equipment to reduce the cost and the lifting of weight is done by hydraulic cylinder which will operate manually. To analyze the load on the crane we used the numerical simulation software i.e. Ansys and for dynamic simulation Adams view.**

Keywords*— *Jib Crane, Material Handling ,MSME sector etc.

I. INTRODUCTION

In material handling the cranes play an important role in modern manufacturing industries. The cranes reduce the workers fatigue and increase the overall efficiency of production processes with good safety. Material Handling includes movement of material, goods and products for storage, control and protection. Jib Crane consists of an inclined member that can rotate about pillar at center and suspend the load from the outer end of the inclined member. Hydraulic crane is use to transmit forces from one point to another to lift heavy loads.To eliminate hydraulic equipment to reduce the cost and weight of the structure by means of some mechanical linkages i.e. mechanical Lever to rotate the crane in angular position and also angular locking arrangement is provided to stabilize the design.[2]

Crane consists of a wire ropes or chains that can be used both to lift and lower materials and to move them horizontally. Primarily crane is used for lifting heavy things and transporting them to other places. It uses one or more simple machines to move loads beyond the normal capability of a man with the use of mechanical advantage. The hydraulic cranes are also used in the industry, which are efficient but they only have the ability to lift the load and put it down at some other position. The general arm design in hydraulic crane is such that it can moves in the vertical plane only, i.e. it has constrained motion. The aim of project is to redesign the hydraulic crane and give its arm the rotational ability so that it can rotate in angular direction.[4]

In present scenario hydraulics theory is being used widely in material handling processes through cranes. Design of crane varies with the loads to be handled and the operations to be performed like Crawler Cranes, Truck Cranes, and Floor Cranes. But the problem is that the cost is the main factor in purchasing material handling system because it directly affects the price of the final product and also for small work the large crane used it is wastage of energy. Handling of heavy objects is a daily activity in machine shops, welding and fabrication workshops. Handling of material in inaccessible areas where other cranes are not preferable, and also the available crane in market cost is more and small scale industries cannot afford.

The static, modal and harmonic analysis study of a column mounted jib crane of 1.5 Ton capacity using ANASYS software carried by Suresh Bollimpelli is used as guideline for this project. In that paper crane was modeled using CATIA and calculation of stresses obtained manually and also using software, the jib crane consists of a base which is fixed to the ground at the bottom. The bottom side of post is connected to the ground with the help of a fixed support. The trolley is moved with the help electric motor mounted in the trolley itself. ‘I’ section jib is used in crane and the wheels run along the length of the jib. The trolley with hoisting machinery used to lift or lower the load by connecting it with a hook. The load hook can perform three separate motions, these beings the hoisting, longitudinal steer of the trolley, and pivoting of the crane through 180 degrees. Each motion is controlled independently by controllers which is situated cage or in a suitable position for controlling from the floor by pendant

chains.[1]

The study done by Asmita Jadhav includes the design, analysis and production of a hydraulic floor crane having arm motion in the vertical and horizontal plane with 180 degree rotation. In this paper they design a crane on the basis of customer requirement and the rotation of boom is done by using a pinion and gear box arrangement is used. The hand calculation of stability and the cylinder design also done but they are not accurate as per the data assumed but stability calculation is useful for calculation and they developed a prototype model and did an experimentation i.e. lifting various weights for various position.[3]

1. Also studied the catalog of the various crane developing companies like Vestil manufacturing from this company site I got the basic concept generate and various hydraulic material handling equipment.
2. Hydraulic cylinder catalog with variable sizes of cylinder with stroke length varies and manually applied load by human.
3. Catalogs of Caster wheel manufacture companies.

II. DESIGN METHODOLOGY

The Analytical calculation for maximum bending stress and the maximum deflection of arm to be calculated and after that the Finite Element analysis using Ansys, Adams software will be compared

.

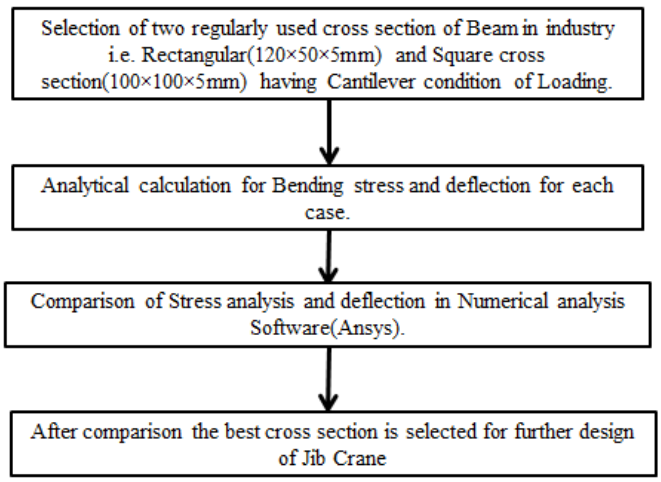

Figure1: Flow chart of Design methodology

III. ANALYTICAL METHOD

Materials are the key factor in material handling system i.e. it cannot fail when the dynamic loading is applied to the equipment. Generally the mild steel is used for manufacturing of structure.

- Material of structure = Mild Steel
- Allowable Yield strength = 250 N/mm^2
- Allowable ultimate tensile strength = 410 N/mm^2

A. *FindingArm Length and load at hydraulic ram force.*

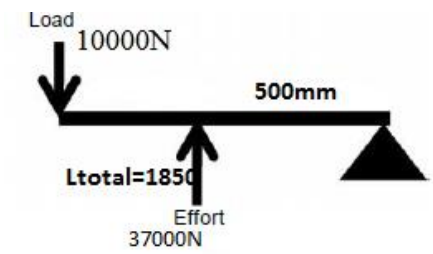

Figure2**:** Free Body Diagram of Load acting on Fulcrum point and hydraulic cylinder effort

For Finding the lengths between the effort and the total length the simple moment equation is used and the addition of vertical and horizontal forces are balanced to get the hydraulic ram force and the lengths.

Calculation for Finding the distance between the Effort, Load and Fulcrum point				
Sr.No	**length L1**	**W(N)**	**Ltotal**	**Ra(N)**
1	500	10000	1450	29000
2	600	10000	1650	27500
3	**500**	**10000**	**1850**	**37000**
4	600	10000	1625	26815

Table1: Calculation for Finding the distance between the Effort, Load and Fulcrum point

W= Load to be lifted (N)

L=Total length (mm)

Ra=Effort required to lift the horizontal arm (N)

From above table we took the Total length 1850mm and length from effort to fulcrum point is 500mm and the hydraulic cylinder ram force required to lift the load is 37000N. This force is developed manually by pushing the lever of the hydraulic cylinder.

B. Arm Bending Stress Calculation for Square and Rectangular cross section

Length	Height	Thickness	$\sigma_{b(N/mm2)}$	$\sigma_{all(N/mm2}$	FOS
50	120	5	236.1702128	250	1.058559
50	120	5	197.8723404	250	1.263441
100	100	5	157.5203252	250	1.587097
100	100	5	188.0081301	250	1.32973
50	120	4	239.1033983	250	1.045573
50	120	4	285.3814753	250	0.87602
100	100	4	227.6524837	250	1.098165
100	100	4	190.7358647	250	1.310713

Table2:Arm Bending stress and FOS calculations

From above table we get the bending stress for the cross rectangular cross section is 236.17 N/mm^2

And for square cross section bending stress value is 157.52 N/mm^2

Refer figure1 for calculating Bending stress we required moment to be calculated, so for first iteration moment will be taken at fulcrum point and for second iteration moment taken at effort point. For design of jib crane with good safety we have to choose factor of safety equals to 1.

Here we final the cross section of arm as rectangular 120×50×5 dimension of arm.

C. CAD Modeling

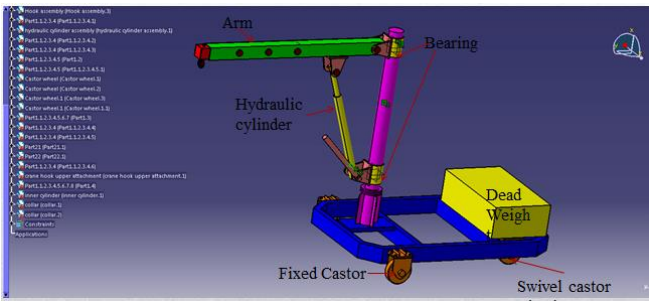

Figure3: CAD Model of the complete Jib Crane.

Figure 2 shows the complete Rotational Jib Crane with dead weight is rest on the frame.

IV. NUMERICAL ANALYSIS

Finite element analysis is most useful technique to finding the strength of structural steel working under known load and Boundary conditions. Before going to Finite element analysis first we have to developed CAD model in itself in numerical software or on Commercial CAD software which will reduce time. Accuracy of FEM results will depends on number of parameters i.e. Boundary Conditions, Loading Conditions, Proper meshing, Selection of material, expertize of analyst.

Here the horizontal arm and the frame are the most critical elements in the crane. So here we only took these two components of crane for FEA. We selected two cross section of horizontal arm for FEA i.e. Rectangular and Square cross section.

A. Square Arm Analysis:

Consider a rectangular cross section for analysis having cross section 100×100×5mm. Here we selected standard cross section for analysis.

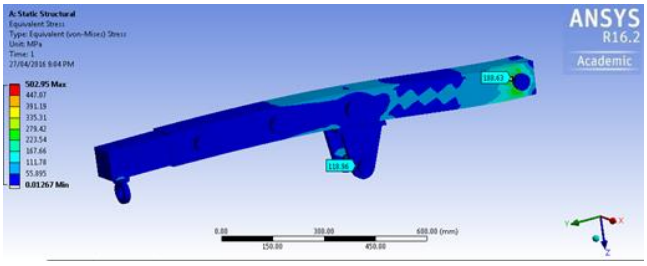

Figure4: Von-mises Stress Analysis of Square arm 100×100×5 mm.

In above figure the stresses in Square cross section of arm is shown and the Load is applied i.e.10000N at end of the arm and Pin of Fulcrum point is fixed due to that the arm motion is free in upward and downward directions. And also a Cylinder Ram force is applied at effort point 37000N. The maximum stress induced is 502.95 Mpa but this stress level is observed at corner point of pin but maximum stress in arm is obtained is 188.23 Mpa and stress level is in safe region.

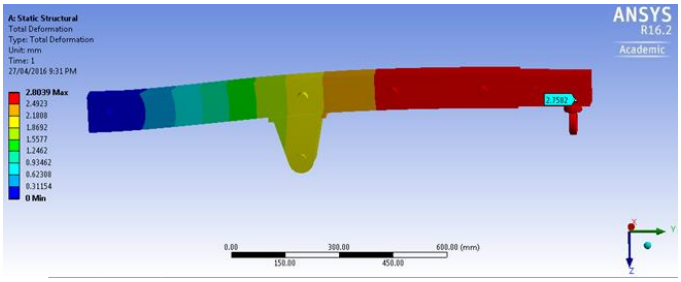

Figure5: Deflection of Square cross section 100×100×5mm

Here we use the same Boundary Conditions as stated above and the Directional Deformation is calculated using Ansys FEA Software. And the maximum deflection obtained is 2.80mm but the 2.75mm deflection is obtained at the end point of arm. Here we got maximum deflection as compared to rectangular cross section arm.

B. Rectangular Arm Analysis:

Consider a rectangular cross section for analysis having cross section 120×50×5mm.

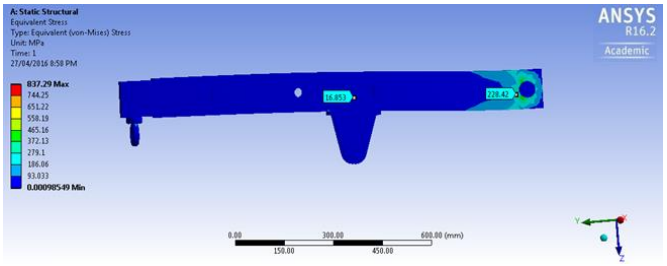

Figure6: Von-mises Stress Analysis of Rectangular arm 120×50×5 mm

In above figure the stresses in rectangular cross section of arm is shown and the Load is applied i.e.10000N at end of the arm and Pin of Fulcrum point is fixed due to that the arm motion is free in upward and downward directions. And also a Cylinder Ram force is applied at effort point 37000N. The maximum stress induced is 837.29 Mpa but this stress level is observed at corner point of pin but maximum stress in arm is obtained is 228.42 Mpa and stress level is in safe region.

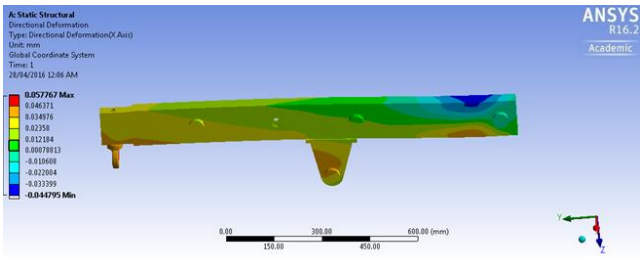

Figure7: Deflection of Rectangular cross section 120×50×5mm

Here we use the same Boundary Conditions as stated above and the Directional Deformation is calculated using Ansys FEA Software. The deflection in horizontal arm is found to be 0.05776mm and it's negligible in consideration.

C. FEA analysis of Frame Structure:

Frame is also the important parameter in design in crane because, If the frame is bends then stability of crane is not proper so that load on frame is also to be calculate. Load from the end of arm is transferred to the frame i.e. Moment will be transferred and also the load.

Moment applied = 1850×10000 Nmm.
Force Applied = 10000 N.
The Boundary conditions are used wheels are fixed, Load and moment is applied.

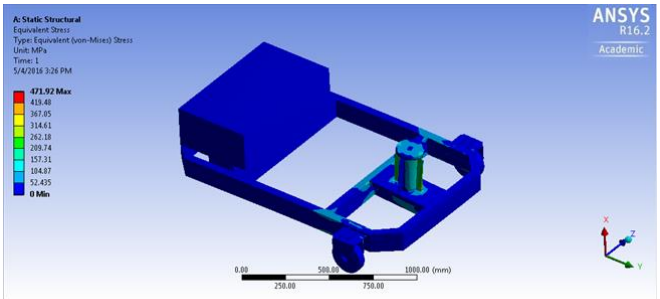

Figure8: Von-mises Stress Analysis of Frame structure

The maximum stress obtained in frame is 471.92 Mpa, after supporting plate is attached to bottom of vertical column then after that the stress level also reduce.

V. MULTIBODY DYNAMIC ANALYSIS

Multibody Dynamic analysis is done in ADAMS VIEW software for finding actual condition of jib crane. In Adams view here we can find the stability of crane i.e. whether the rotational jib crane is stable during working condition or not with respect to time analysis. Actual forces acting on crane can be found out and also the forces acting on each wheel.

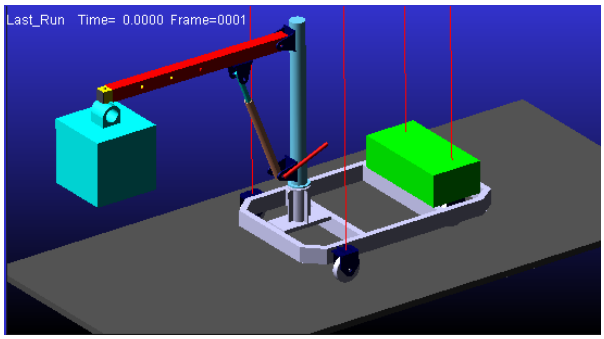

Figure9: Rotational Jib crane model in Adams View

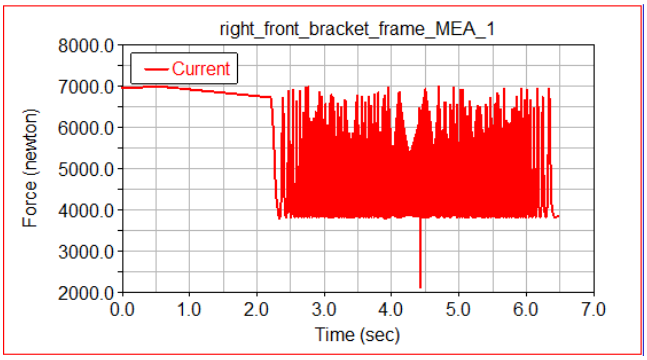

Figure10: Forces acting on the Right Front Wheel in Adams view

From above figure we get the forces acting on the each wheel, from that force we can select the wheel size and capacity of wheel to bear load in dynamic conditions.

Load acting on each wheel is about 7000N so according to that

Selected wheels are,

Wheel Type	Size of wheel Diameter and width	Load Carrying capacity	Material of wheel
Fixed Castors wheel	200×50 mm	9000 N	Cast Iron
Castor wheel	200×50 mm	4500 N	Cast Iron

Figure9: First rotating castor wheel and second Fixed Castor wheel.

VI. Manufacturing and Testing

Fig 10:Manufacturing of Jib crane model

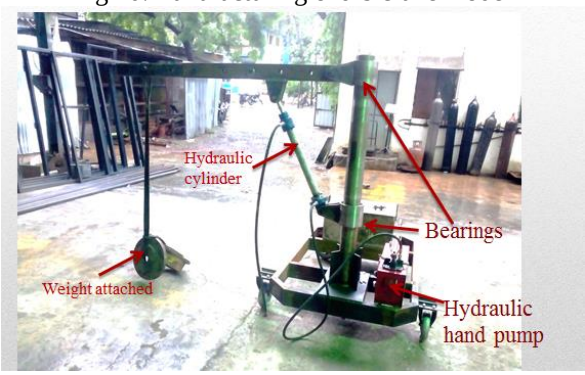

Figure 11:Actual jib crane model during testing

VII. Results

The Analytical and Numerical analysis of the important parameters are evaluated i.e. Arm of Jib crane and also the frame of Jib crane. Bending stresses are compared for two cross sections are given below,

Type of Cross section	Size	Analytical	Numerical
Rectangular	120x50x5	236N/mm^2	228.42N/mm^2
Square	100x100x5	188N/mm^2	188.63N/mm^2

Table3: Arm Selection results.

From analytical and Numerical analysis cross section the rectangular cross section is good the deflection is minimum in case of rectangular cross section.

- The complete jib crane model is manufactured and tested for various loading condition. Actually the crane is design at end point the load is lifted up to 200Kg but in testing the loads trials are done for 100Kg,130Kg,150Kg and during lifting there is no toppling that means the stability of crane is ok.

VIII. Conclusion

In many companies they are using overhead cranes for lifting small load that will cause extra cost investment so customized crane is required. The Horizontal Arm is numerically checked for Rectangular and square cross sections. Results show a better solution for rectangular cross section in bending stress and in case of deflection of arm.

In present work a novel approach for designing of rotational jib crane is proposed for Micro Small Medium Enterprises (MSME) and implemented successfully and they will be benefited.

Acknowledgment

We would like to thank Mr. Ravindra Kolhe for their help and insight on this research.

References

[1] K. Suresh Bollimpelli, “Design and Analysis of column mounted Jib Crane”, International journal of research aeronautical and mechanical engineering ISSN (Online):2321-3051,2015.

[2] V. Josh Ananthvino, “Design and Fabrication of a hydraulic Floor crane”, International journal of Biotech trends and technology (IJBTT)-Volume2Issue1 number-Jan2012.

[3] Asmita Jadhav, “Optimization in Design of Rotating Hydraulic Crane”, International Journal of Engineering and Advanced Technology (IJEAT) ISSN: 2249 – 8958, Volume-3, Issue-2, December 2013.

[4] Muhammadu Masin MUHAMMADU, “Design, fabrication and testing of hydraulic crane”, Journal of Nature and Science 2012.