Design and Fabrication of Tractor Rear Loader for Constructional Applications

Sagar Kailas More[1], Susheel M. Magar[2], Pradip B.Dhole[3]
[1]PG Scholar and [2]Associate Professor, Department of Mechanical Engineering
[1,2]Padmshri Dr. Vitthalrao Vikhe Patil College of Engineering, Ahmednagar, India.
[3] Director, Aditya Electrical and Contractors, Ahmednagar, India.
[1]moresagar911@gmail.com,[2]magarsusheel@gmail.com,[3]pradipdhole7@gmail.com

***Abstract*— This rear loader attachment is developed to minimize the labor work as well as to minimize a time for material handling in various applications like constructional work. It is simple in construction and can be easily attached with the existing rear mechanism of any tractor so no need to develop a new mechanism for rear loader attachment. This attachment is developed to overcome the various limitations which other earth moving equipment have like larger size, heavier in mass generally in tones etc. Rear loader is designed with components which are easily available in market so maintenance and replacement of components is not a problem. Important benefit of this design is that, it allows mower desk to stay attached to the tractor while providing quick engagement-disengament features. Unskilled person can also operate this arrangement very easily as it does not requires any special training which requires while working with other machines like lathe machine. The loader arm and bucket assemblies are completely detachable from the tractor in landscaping task. This rear loader attachment also allows for a greater load carrying capacity and lift range. It can pick up a load up to 120 kg to 150 kg and has enough lift to be able to put loads of mulch, soil and gravel. Various models of tractors like Arjun (605), Mahindra (575), Swaraj (744), Sonalika (855) Select tractor-Arjun (605) can use this rear loader attachment as accessory without changing its actual mechanism at rear side. It can lift weight of material up to 5 to 8 fits. Its capacity of load lifting can be improved by small changes in design and it can be improved up to 200 to 250 kg. Its cost is much lower as compare to other accessories available in market.**

Keyword: bucket assemblies, lower cost, quick disconnect, Rear-End Loader.

I.INTRODUCTION

IN current scenario of constructional equipment like tractor front hydraulic bucket is used, but that type of bucket have more extra attachments required like hydraulic operated valve, piston-cylinder arrangement (actuator) piping and extra support are required (body and frame) that way the cost of this bucket is high and more complicated. The rear bucket is used to overcome or avoid that type of extra attachment as well as complicated construction due to use in rear mechanical linkage bucket. The constructive and operational improvement of tractors as mobile self-propelled agricultural means allowed the mounting or coupling of equipment, hence rendering tractors exploitable in agriculture as well as in other branches of economy (forestry, construction works, etc.). Consequently, tractors equipped with rear loaders and adequate instruments are successfully used in loading and unloading of a wide range of products and materials.

Although the first front loaders have been developed over 60 years ago, to date only few studies have been recorded concerning the dynamic behavior of the tractor–front loader system, as the principal interest of research has been focused mainly on the constructive and functional optimization of these systems and the development of working elements for the manipulation of a widest possible variety of materials.

The development of calculations of the tractor carriage and its front axle under the influence of various types of agricultural equipment mounted on or coupled to it allows for the completion of varied theoretical and experimental research based on the measurement, recording wiring complexity and mechanical safety features that would add expense, weight and complexity for the home own to maintain.

There are various type of end loader are used in the various application. This are explain below

Fig.1. back-end loader

One of the most popular implements for compact tractors is a front-end loader. A loader will allow you to dig, move soil

This work is sponsored by Aditya Electricals and contractors as a part of material handling equipment in construction.

Susheel M. Magar is associate professor in department of mechanical engineering under Padmshri Dr. Vitthalrao Vikhe Patil College of Engineering, Vilad Ghat (Ahmednagar), India. (e-mail:magarsusheel@gmail.com)

Sagar K. More is PG scholar of design engineering in department of mechanical engineering under Padmshri Dr. Vitthalrao Vikhe Patil College of Engineering,Vilad Ghat (Ahmednagar) also working as a lecturer in department of mechanical engineering ,Vidya Niketan College of engineering and polytechnic,Bota(Sangamner),Mahatashtra,422602,india (e-mail: moresagar911@gmail.com).

Pradip B. Dhole is working as director of Aditya Electricals and contractors, who sponsored and support this project work. (e-mail:pradipdhole7@gmail.com).

or other bulk products, carry bags and other bulky items, lift equipment (using a chain), move hay bales, lift pallets and even do light grading. Not all compact tractors are equipped with the necessary hydraulic connections for a loader, so be sure you check on hydraulics if adding a loader to an existing tractor. Some manufacturers now offer front-end loaders that are much easier to attach and remove (once initially mounted) than in the past, making it more practical to remove a loader when you don't need it. A loader for a minimal tractor may cost $2,000-$3,000, contingent upon size and quality. As a rule, a loader made by the tractor maker will cost all the more, however it ought to fit better and will be planned particularly for your tractor model. Front-end loaders are famous, however costly, alternatives. Numerous individuals who purchase a little tractor with a loader find that they from time to time utilize the loader. The loader is a disturbance to leave on the tractor, decreases deceivability and makes it more hard to man oeuvre, however can be a bother to expel – even with the new, quicker mounting frameworks. On the off chance that you truly do require a loader, think about getting as a smaller tractor with front-wheel help for both enhanced footing and expanded front-hub load.

Fig.2. Backhoes for compact

Backhoes for minimized tractors are much lighter and lower in limit than devoted modern quality tractor loader/ backhoes. Some organizations make little devoted tractor loader/ backhoes comparative in size to smaller tractors; even these are significantly heavier obligation than extra reduced tractor Backhoes. The littlest full-measure mechanical tractor loader/ backhoes are evaluated for a 13-to 14-foot burrowing profundity. Most extra backhoes are appraised for diving profundities in the 6-to 10-foot range, with correspondingly bring down burrowing strengths accessible. Working an backhoes requires impressively more expertise and experience than working most tractor actualizes Mounting and expelling an backhoes is considerably more troublesome and tedious than for most different actualizes. Be sure you really need a backhoe before committing to the expense and effort. They can be handy but require a major investment of time and money. Safety is always a concern. Because of the high hydraulic pressures associated with backhoes, hydraulic hose leaks can inject oil under the skin. Furthermore, it is all too easy to tip a tractor over when swinging a backhoe – especially if working on a slope. If possible, you should be under the ROPS and secured with a seatbelt. Be careful to keep any bystanders away while working. A swinging backhoe boom can injure or kill someone. Before digging, have all underground utilities located and then stay several feet away from them. Also, watch out for overhead wires.

Fig.3.plough for agricultural work

There are a few approaches to handle beds with a smaller tractor. The most well-known route is with a bed fork connection to supplant the can on a front-end loader. Moving forks in this setup is clumsier than with a committed fork lift, yet it is still a sensibly helpful approach to get and move beds. Loaders on little minimal tractors won't have the capacity to lift overwhelming beds. Stabilizer on the back of the tractor will be expected to get and move a bed securely. A quicker and simpler method for adding forks to a frontend loader is to mount the forks to the front of the container. There are units that comprise of snares that mount to the highest point of the container. The forks are connected to an overwhelming steel bar over the highest points of the forks. The driver just drives up to the forks, tilts the pail so that the snares get the forks, then tilts it back and is prepared to go. A few frameworks invert the connection technique and put the bar on the basin and the snares on the forks. This framework is anything but difficult to hitch to yet has two noteworthy downsides: since it fits out before the basin, it moves the heap significantly encourage forward and diminishes load limit, and it is frequently difficult to see the forks in view of the container. This makes it hard to get a bed.

II.LITERATURE REVIEW

Mehul Kumar (2015) in his exploration expressed that Hydraulic excavator machines are substantial obligation earth mover comprising of a blast, arm and basin. It takes a shot at standard of water powered liquid with pressure driven chamber and pressure driven engines. The Hydraulic excavator excavator operation require composed development of blast, arm and container to control the can tip position by taking after a sought direction and to utilize the excavator machines successfully oblivious, extreme climate, most exceedingly awful working condition, perilous or unfortunate environment and filthy regions this can be accomplished just through the programmed control of the water powered excavator machine [1].A. P. Bahale (2014) notice that increasingly associations overall need to create items for worldwide markets. One of today's patterns to take care of this issue of making items in the worldwide business sector is by including logistics to oversee complex appropriation prerequisites [2].Rajeev Ranjan (2014) took a shot at Shielded Metal Arc Welding (SMAW) procedure is a circular segment welding process which produces blend of metal by warming

them with a bend between a secured metal terminal and the work. Protecting is gotten from disintegration of the anode covering [3].Prasad Karande (2013) clarified better usage of labor, giving item adaptability, expanding profitability, diminishing lead time, decrease in taking care of cost, expanded proficiency of material low, and improvement of creation procedure are probably the most imperative issues impacting material taking care of (MH) gear choice. As a wide assortment of MH hardware is accessible today, determination of the correct gear for an outlined assembling framework is a convoluted errand [4]. Changliang Chen (2013) in real assembling process, numerous weld metals have expansive measurements and complex shapes, and they are typically collected through a multi-pass welding process [5]. J. M. Prajapati (2012) in "Assessment of Bucket Capacity, Digging Force Calculations and Static Force Analysis of Mini Hydraulic Backhoe Excavator" they concentrated on Excavators, which are utilized basically to uncover beneath the regular surface of the ground on which the machine rests and load it into trucks or tractor [6].

III.PROBLEM STATEMENT

Material handling is a crucial task while working with constructional works like road-building constructions, because of improper material handling it works lots of time and causes delay in estimated time. Though there are number of earth moving equipment's are available in market, there high cost and weight as well as complicated construction are the problems in front of user. Also various earth moving equipment require much more space for movement which is one headache while working in narrow spaces. Some tractors today have hydraulic drive systems and it would great to tap into that systems or create one, for other hydraulic applications. The front tractor rear bucket is used in specific application. The cost of the front bucket is also high and this is not economical for every farmer and user.

IV.METHODOLOGY

First step in this project is selection of proper filed. We know various field such as agricultural, automobile & heat related where we designer works. Survey was done on these fields and selected one of the best concept constructional filed where India is proceeding. Purpose of this project is to reduce the human effort in the constructional area. So the title of project is taken as"Design and fabrication of tractor rear bucket" .In this project selection and designing of various component plays very important specially while dealing with various lifting capacity, input parameter etc. In this select the input power to lift bucket, use the tractor hydraulic power as a input power of the bucket. Select the proper material for various part of the bucket. In which considering the various property of material Such as strength, stress, ductility, hardness and elongation has been taken. Design the bucket, beam, spring locking system, welding strength is depends upon applied load in a bucket. The hydraulic power of the tractor is sufficient to lift require weight, considering the various tractor model such as Arjun (605), Mahindra (575), Swaraj (744), Sonalika (855) Select tractor-Arjun (605) we found no need of separate operating mechanism.

After complete the bucket design then analysis of the design by using mathematical/experiment as well as using software like ANSYS. After completion of the design and analysis of bucket trial conduction of the actual model of bucket as per the load capacity on the Mahindra tractor is taken. During this we will calculate the temperature of the oil, engine loading calculation and fuel consumption.

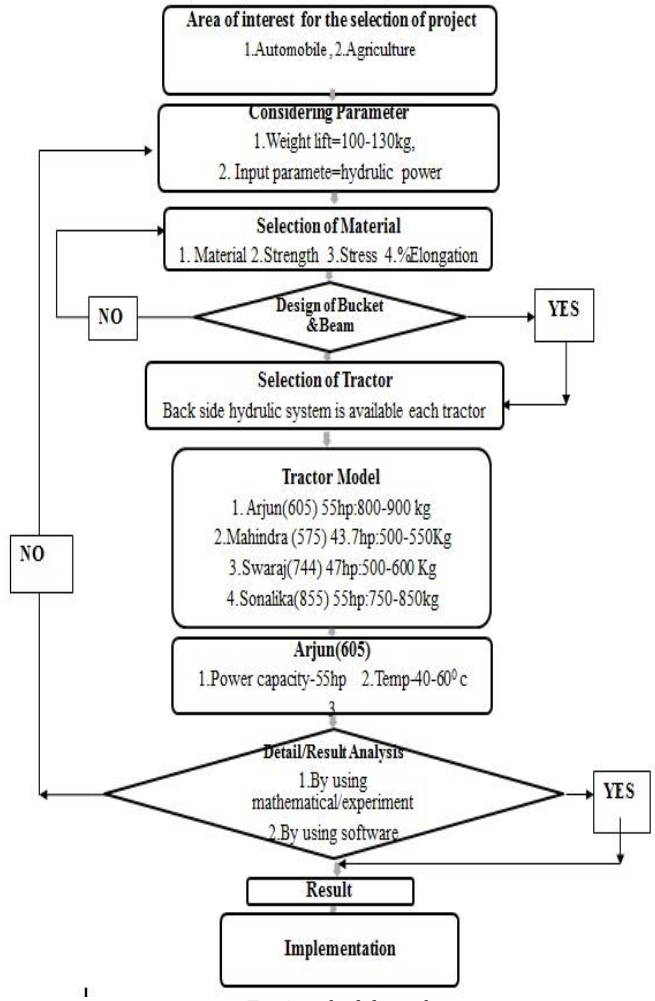

Fig.4.methodology chart

V.DESIGN OF VARIOUS ELEMENTS FOR TRL

TABLE 1
ABBREVIATIONS USED IN DESIGN

Symbol	*Quantity*	*unit*
ρ	density	Kg/m^3
τ	shear stress	N/mm^2
e	eccentricity	mm
p	load act on bucket	N
I_{xx}	Moment of inertia about horizontal axis	Mm^4
τ_d	Direct shear stress	N/mm^2
G	modulus of rigidity	N/mm^2
C	spring index	
L_s	solid length	mm
L_f	Free length	mm
∂	deflection	deflection
P	pitch of spring	mm
m	mass lift by using bucket	kg
v	volume of the bucket	m^3

L	length of the bucket	m
W	width of the bucket	m
H	height of the bucket	m

A. Design of Bucket

The material selected for experiment is alloy steel. Chemical composition of the alloy steel is given in the grade Structural Steel offers good ductility and shock resisting properties combined with resistance to wear. With these characteristics it is popular high tensile engineering steel with a tensile of 400-500 N/mm². At low temperatures have reasonably good impact properties.

We assume the weight lift by using bucket is 120 Kg.

$\rho = m/v$,

m =120 Kg

As $\rho = 6000\ kg/m^3$

$6000 = 120/v$

So $V = 0.02\ m^3$

Let,

Length of the bucket =L

Width = L/2

Height = L/3

Now we have V = L*L/2*L/3

0.02 = L*L/2*L/3

L= 0.5 m

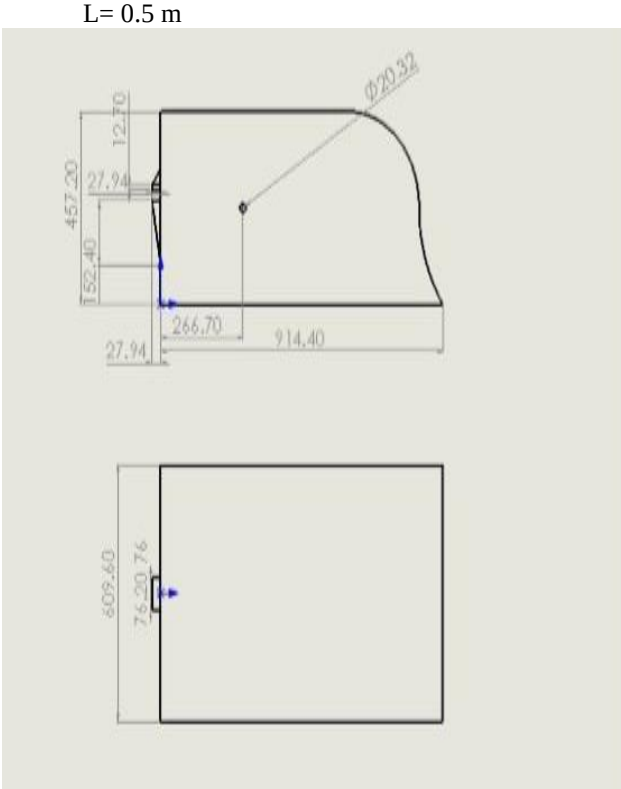

Fig.5.bucket sketch

Following table shows various parameters consider for fabrication of bucket by considering various applied loads.

TABLE 2

BUCKET PARAMETERS

Sr.No.	*Parameter*	*Dimension*
1	**L**	**0.9**
2	**W**	**0.6**
3	**H**	**0.36**

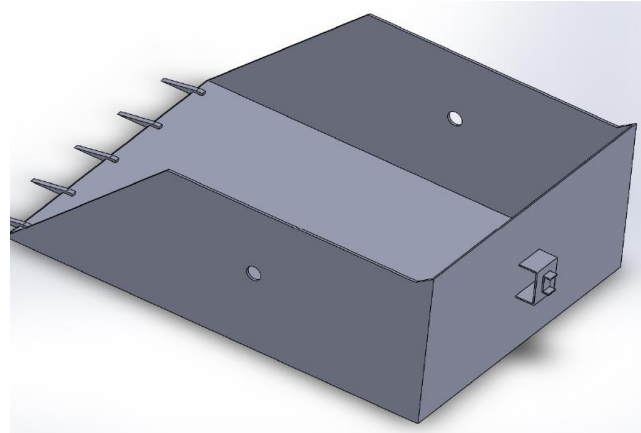

Fig.6.bucket 3D drawing

B. Design of beam

It is a important component of TRL which connects bucket with tractor rear movement mechanism i.e. connecting part between driving and driven member. Material used for designing this beam is taken as alloy steel and we assume its length as 762 mm considering load parameter and other calculations.

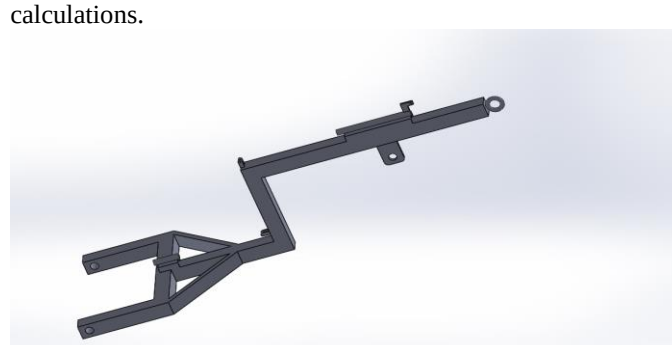

Fig.7.beam 3D drawing

C. Design of Welded Joint

The main purpose of the design of welded joint is to find out the thickness and throat thickness under the given load condition.

Weld type is taken as fillet weld, now we have

τ = shear stress of the weld, N/mm^2

=100 N/mm2,

e = eccentricity, mm

= 450 mm,

p = load act on bucket

= 1.41*103 N

a. moment of inertia of weld group about xx-axis is,

$I_{xx} = [0+l_1+ (l_2/2)^2+1/12*(l_2)^3*t]$

$= [600t*(360/2)^2+1/12*(360)^3t]$

$= 23.32*10^6\ mm^4$

As l_1= 600 mm, l_2 = 360 mm,

b. The total throat area of the weld is,

A = 600t + 2(360*t)

=1320t

c. Direct (primary) shear stress in the weld is,

$\tau_d = P/A$

$=1.41*10^3/1320t$

=1.0681/t

d. Moment induced (secondary) shear stress (τ_d),

M = P*e

=150*9.81*450
= 662175N.mm
Y = l_2/2
= 360/2
=180

e. The maximum moment induced shear stress is,
$\tau_d = M*y/I_{xx}$
= (662175*180)/ (23.32*10^6)*t

f. Resultant shear stress (τ)
$\tau = \sqrt{(\tau_d^2 + \tau_b^2)}$.
100 = 518.34/t
t = 518.34/100
t = 5.18mm
Weld size, h= $\sqrt{2}$t =7.82mm
h =8mm
Actual throat thickness=h/$\sqrt{2}$,
t = 8/$\sqrt{2}$ =5.65
t=6mm
Calculated stress
τ = 518.34/t
= 518.34/6
= 86.39 N/mm^2
86.39 N/mm^2 < 100 N/mm^2
Stress is less than the actual stress then design is safe.

D. Design of spring
Assume
Spring load: 5 Kg (50N)….when spring locked
10 Kg (80N)….when spring unlocked
Inside guide bush diameter =24mm
Outside recess diameter =36mm
Plate move from socket =25mm
Properties of spring steel,
S_{ut} =750N/mm^2
G = 8*10^4 N/mm^2
τ = 0.5 S_{ut}
D =36+24/2
D =30mm
$\tau = k_w*(8f_{max}D/\pi d^3)$
Assume, k_w =1
355=1*8*50*300/πd^3
d=2.58mm =3mm
2) Spring index = c = D/d
=30/3
C=10
Checking shear stress induced in spring,
K_w= 4c-1/4c-4+0.615/c
= 4*10-1/4*10-4+0.615/10
= 1.145
= 1.145*(8*80*30/π*3^3)
= 259.17N/mm^2
259.17N/mm2 ≤ 355N/mm2
Therefore 3mm diameter for spring wire is safe.

3) Total number of coil:
K = f_{max}-f_{min}/∂
= 80-50/25
= 1.2
K = Gd/8c^3n
1.2=8*10^4*3/8*10^3*n
n=23

Total number of coil (n'):
n'= n+2
= 23+2
n' = 25 turn

4) Solid length
L_s= (n+2)*d
L_s=75mm

TABLE 2
SPRING PARAMETERS

Sr. No.	Parameter	Size (mm)
1	D	30
2	d	3
3	c	10
4	n	23
5	n'	25
6	L_s	75
7	L_f	151.65
8	p	6.33

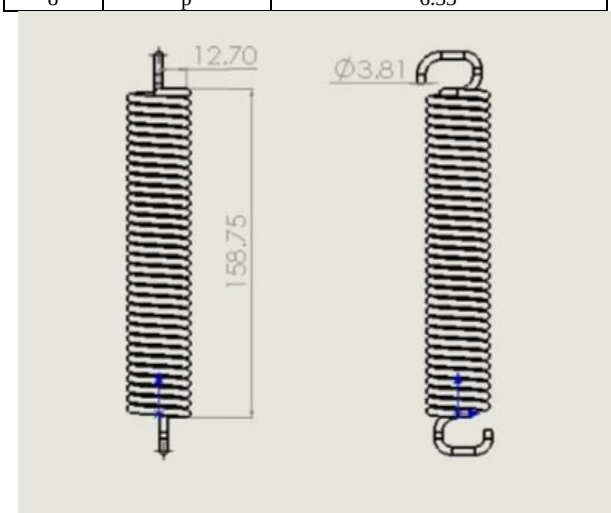

Fig.8.spring drawing

E.selection of standerd components
Various standerd components are selected with the help of the design data book such as bearing,nuts,bolts,washers etc.


Fig.9.actual model

VI. WORKING PRINCIPAL AND WORKING

It works on simple working principle of rear pallet of tractor. Rear pallet of any tractor is powered with the help of the hydraulic system as shown in figure given bellow.

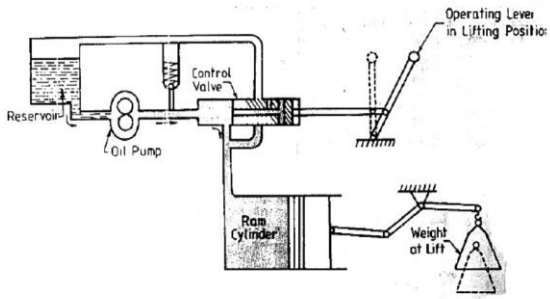

Fig.10.working principle of hydraulic lever

Simple hand operated lever is used to apply small force in hydraulic system which convert it into larger force at the end user i.e.at back pallet. On a back pallet rear loader arrangement is fixed as shown in figure given below

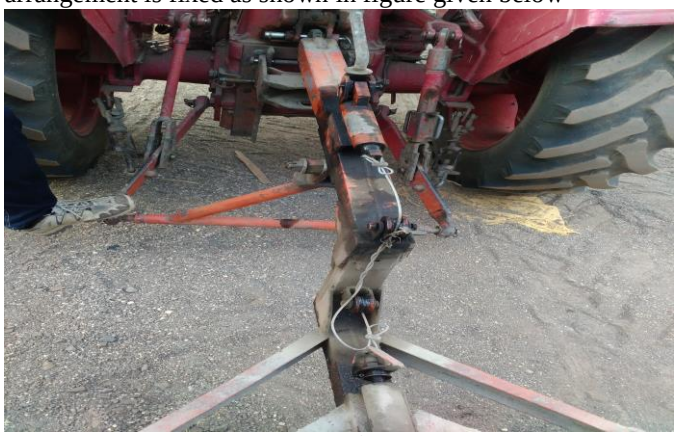

Fig.11.engagement of beam with lever

Lifting force is applied with the help of a hand lever itself by using basic principle of hydraulic power in hydraulic circuit. Basic push-pull force is again developed by movement of tractor itself. The bucket up-down motion as per requirement by using hydraulics arm when the arm push front side at time bucket goes on up and arm pull backside at time bucket goes on down motion. When bucket goes on down and tractor give to rear motion the bucket fill on particular material like, silica, stone crush, agricultural waste material and bucket lift on up side by using hydraulic power then the use spring lock system and lever and bucket disengage from beam. And total material goes on tractor trolley or truck, empty space. Then the tractor goes on front motion and bucket give to down at time bucket are engage automatically by using spring return force and it also ready to fill material on bucket to tractor rear motion.

VII. RESULT AND DISCUSION

The various advantages of TRL are simple in construction, maintenance is less, extra hydraulic system is not required, engagement and disengagement is simple, and environment condition not effect on the bucket as well as its cost is less compare to the front bucket and other accessories used on earth moving equipment. Although at the time of operation tractor operate in reverse condition and operated on the limited depth are its limitations.

It can be used mostly in construction of buildings like filling the sand, stone, crush and cements to the mixture machine. It can also be used in manufacturing of bricks in bricks industries. It is used in also agriculture like fill the cow dung to the tractor trolley. It can be use to handle construction material like brick, crush, sand.

VII. CONCLUSION

From the above designing and development of tractor rear loader we conclude that there is need of development of such various equipment. There are number of equipment's which we are using unnneccsssorily though we can modify them can reduce its cost as well as can make them more useful by reducing weight and indirectly its cost too. Front loader has limited use as well as it will get number of extra changes required in mechanism as we are not providing any inbuilt hydraulic mechanism for front movements. After designing and development of tractor rear loader we conclude with simplicity of mechanism is giving flexibility of its effective use. The rear bucket can also use various application such as construction, agriculture and mining. This bucket is suitable for all tractors. Avoid human effort in construction and agricultural area. Lifting capacity depend on the tractor hydraulic capacity

Acknowledgment

As a matter of first importance, we might want to express our profound feeling of appreciation and obligation to our manager Prof.S.M.Magar for his significant consolation, recommendations and backing from an early phase of this anticipate and giving me phenomenal encounters all through the work. Most importantly, his precious and careful supervision at every last period of work enlivened us in incalculable ways. We exceptionally recognize him for his recommendation, supervision, and the basic commitment as and when required amid this course. His association with inventiveness has activated and sustained my scholarly development that will help me for quite a while to come. We are pleased to record that we had the chance to work with an incredibly experienced Professor like him. We are exceedingly thankful to Dr.H.N.Kudal, Principal, PDVVP College of Engineering, Ahmednagar, Dr. Kale K.B., Head, Department of Mechanical Engineering and Prof. Navthar R.R., PG organizer, Department of Mechanical Engineering for their kind backing and consent to utilize the offices accessible in the establishment.

REFERENCES

[1] V. B. Bhandari, *"design of machine elements", Tata McGraw hill Publishing company, eighth edition. India.*

[2] Kalaikathir Achchagan, *"Design Data Book", PSG College of technology, 4th edition, Coimbatore-India.*

[3] Dhaval Kumar A Patel, Bhavesh P Pate and Mehul Kumar A Patel., April 2015,*"A Critical Review On Kinematics Of Hydraulic Excavator Backhoe Attachment",Vol. 4, No. 2,pp.189-203.*

[4] Bhaveshkumar P. Patel, Jagdish M. Prajapati., 2012, *"Evaluation of Bucket Capacity, Digging Force Calculations and Static Force Analysis of Mini Hydraulic Backhoe Excavator", machine design, Vol.4, pp. 59-66.*

[5] Bhaveshkumar P. Patel and J. M. Prajapati., October 2011, *"A Review on*

FEA and Optimization of Backhoe Attachment in Hydraulic Excavator", IACSIT International Journal of Engineering and Technology, Vol. 3, pp.505-511.

[6] Bhupender Singh , Bhaskar Nagar, B.S. Kadam3, Anuj kumar, 2011, *"Modeling And Finite Element Analysis Of Crane Boom", International Journal of Advanced Engineering Research and Studies, Vol. 1, pp. 51-52.*

[7] Abhay K. Pande, R. B. Chadge, Sachin Kharat, 2015, *"Design and Analysis of Clogged Soil Ejecting Mechanism in Long-Reach Excavator Bucket", International Journal of Science and Research (IJSR), pp. 96-102.*

[8] Manish S Lande1* and Sunil J Rajpal1, *2013, "Comparative Analysis of Tractor's Trolley Axle by Using FEA. (By Considering Change in Materials Existing Shape and Size)", International journal of mechanical engineering and robotics research, Vol. 2, No. 3, pp. 157-167***.**

[9] N. R. Patil, Ravichandra R. Kulkarni, Bhushan R. Mane, Suhil H. Malve, 2014, *"Static analysis of Go-Kart Chassis frame by Analytical and SolidWorks Simulation", International Journal of Scientific Engineering and Technology, Volume No.3 Issue No.5, pp. 661-663.*

[10] Juber Hussain Qureshi, Manish Sagar, 2012, *"The Finite Element Analysis of Boom of Backhoe Loader", International Journal of Engineering Research and Applications, Vol. 2, Issue 3, pp.1484-1487.*

[11] Dinesh Shinde, Kanak Kalita, 2015, *"FE Analysis of Knuckle Joint Pin Used in Tractor Trailer", ARPN Journal of Engineering and Applied Sciences, VOL. 10, NO. 5, pp. 2227-2237.*

[12] Ahmet Erklig, Eyup Yeter, 2013, *"The Improvements of the Backhoe-Loader Arms", Modeling and Numerical Simulation of Material Science, vol.3, pp. 142-148.*