International Engineering Research Journal Page No 557-561

Design and Development of Coupling Torque Endurance Test Machine with Variable Torque and Chamber Adjustment

Mr. Shrikant C. Borude[1], Prof. Nagraj S. Biradar [2], Mr. Balkrushana V. Ghanwat[3]

[1, 2] JSPM's Imperial College of Engineering & Research, Wagholi, Pune-412 207, India

[3] BVG Tech, Pimpri, Pune 411 039, India

***Abstract*- Purpose of the test machine is to introduce various physical mathematical, scientific, and engineering principles associated with testing of Rubber-Metal Bonding of Coupling used in 3-wheeler. The project will be completed under the guidance of JSPM's ICOER, Wagholi, Pune and BVG Tech, Pune. Here, the scientific concepts in physics, mechanics and mathematics are combined with a hands-on experiment to demonstrate testing of Coupling for torque endurance test. The experiment is conducted on a small-scale highly instrumented test machine. The experimental measurements and physical observations are used to confirm the manufacturing process used. The mathematical and engineering models used to design and to build full size Coupling Endurance Test Machine. The test gives the reliability of coupling when subjected to specified torque and specified speed , and specified angle (+/-108 kg-m torque and 190 cycles per minute, 7° inclination).**

(Keywords: coupling, endurance, torque, speed, test machine)

I.INTRODUCTION

Coupling is device used to connect two shafts together at their ends, for purpose of transmitting power. Coupling does not allow disconnection of two shafts during operation, however there are torque limiting couplings which can slip or disconnect when some torque limit is exceeds certain value. The primary purpose of the coupling is to join two pieces of rotating equipment allowing to permits, some degree of misalignment or end movement or both.

The Rubber coupling is used in 3-wheeler which is prepared with the rubber molding process. It consists of rubber metal bonding. Metal strips, for actual clamping of sample on desired location, and in between rubber allows for flexible power transmission [2]. The Coupling Torque Endurance Test Machine is designed to test which gives the reliability of coupling when subjected to specified torque and specified speed , and specified angle (+/- 108 kg-m torque and 180 cpm, at 7° inclination).

Thus, it is much necessary for designers to provide a better design of parts having maximum reliability with optimizing to minimum weight and cost. Keep design safe, under all loading conditions. From initial concept building to final product is done. FEA approach can be applied for the optimization. 3D model of a test machine will be drawn in CATIA V5R17. Model will be fabricated and testing will be done for the test sample is in scope. The suggestion after test result is not in scope.

II.GENERAL CHARACTERISTICS OF TEST MACHINE

First, before starting any work, the actual mounting condition of coupling is observed. In actual running condition, the coupling which is driven by ti-rod from differential gearbox which having engine propeller shaft. The test should be conducted at same situation with different torque conditions. Along with the torque condition, the effect of chamber angle is also major affecting factor for the life of coupling.

When a system accelerate mass in one direction, the accelerated mass produce opposite force of equal magnitude but opposite direction on that system. The force applied on a rotary part in a direction of motion is called torque.[6] Torque is physical quantity which required to move vehicle through some distance on frictional surface. Toque is related to the distance of force in direction of motion from axis of rotation. Torque is generated by the engines is transmitted to wheel through power transmission system consisting of different components.

In the test machine, maximum required torque is going to generate through pulley and motor arrangement. The final required torque value can be achieved with adjusting the eccentricity on the machine. The eccentricity (i.e. torque) is converted the deflection value [3].

$$S = r * \theta$$

This deflection is indicated on the dial provided at front. The speed can be adjusted with the variable frequency drive for the motor. The set number of cycle can be performed by mechatronics control system.[1] The magnitude of the torque depends on the set eccentricity. The final torque is provided to the coupling through connecting provided.

Fig 2.1-Three wheeler Coupling (Test Part)

A connecting link pushes forward by the final torque value. The torque of equal in magnitude, but opposite in direction also acts on the coupling through another end which is fixed [5].The main parameters to be tested are the effect of torque acting on rubber metal boding for number of cycles. The test machine consists of following important components/systems:

1. Coupling, mounted on two of holder.
2. Test rig fabricated in mild steel.
3. Coupling with holding both sides, for angle transmission and twisting mechanism.
4. Eccentric plate and Connecting Link.
5. Slotting Arrangement to set different angle.
6. 4 V-Belt Transmissions.
7. 4 Plumber Block to support arrangement.
8. Control panel.

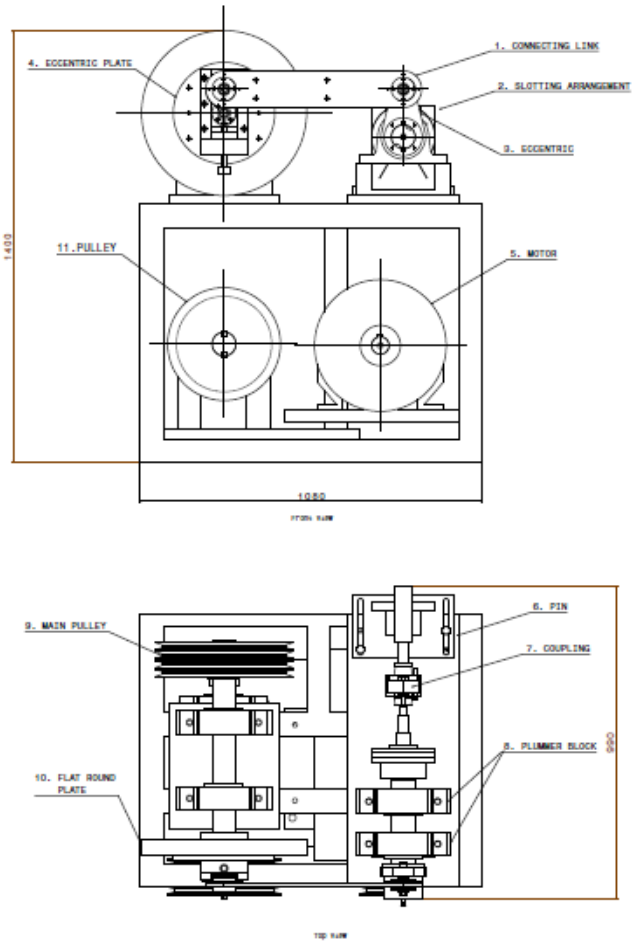

Fig 2.2 Schematic diagram of Coupling Torque Endurance Test Machine.

Test machine contains different parts/instruments. The overall Bill of Material of it as

Sr. No.	Qty. (Nos.)	Part Name
1.	1	Chamber Adjustment Fixture
2.	4	M20 Stud
3.	2	Bearing Housing
4.	2	Bearing Housing Cap
5.	1	Pin
6.	2	Eccentric Mechanism Fixture
7.	1	Flywheel Plate
8.	1	Flanged Connecting Shaft
9.	1	Eccentric
10.	1	Eccentric Connecting Shaft
11.	2	Flat for Pin
12.	4	Round block for PB
13.	1	Pulley 5” B-2
14.	1	Pulley 14” B-2
15.	1	Pulley 8” B-2
16.	1	Pulley 17.5” B-2
17.	1	Shaft 75 Main
18.	1	Shaft 75 Upper
19.	1	Shaft 75 Bottom

20.	1	Motor_siemens_30kW_1470rpm_210L
21.	4	Plumber Block (ID 75 mm)
22.	1	Square block for Plumber Block
23.	1	Right side
24.	1	Coupling 85 PCD
25.	1	Left side support
26.	2	Square Block _ Small
27.	2	Square Block _ Big
28.	1	Coupling holder_1
29.	1	Coupling holder_2

III.METHODOLOGY

This chapter includes the details explanation of methodology that is being used to make this project complete and working well. The method is use to achieve the objective of the project that will accomplish perfect result in order to evaluate the working project. There are generally three major steps of methodology to complete the project, which is planning, implementing and analysis. All the methods used for finding, analyze and finalizing project related data.

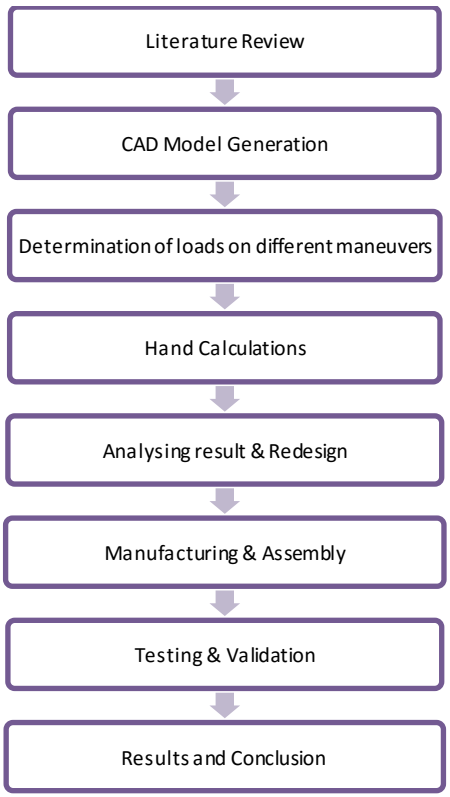

Fig. 3.1 Flow chart for Steps of Methodology

IV.WORKING OF MACHINE

The test machine is equipped with arrangement to conduct test for twisting (i.e. torque) of coupling mounted in test fixture for required speed and at specific angle and for specified number of cycle. The machine consists of two main arrangements are used. These arrangements are as below.

1. Adjustable Torque Transmission: By Using Adjustable Eccentricity Screw of connecting member.
2. Chamber Angle Adjustment: By using adjustable fixture arrangement.

1.1 Adjustable Torque Transmission Arrangement:

In this arrangement, the clamped coupling connected through the actual fixture mounted in the vehicle with additional fixture arrangement. The rotating end of coupling is connected to power transmission system. These two systems are connected through connecting link whose one end having adjustable eccentricity mechanism. This adjustable mechanism allows transferring required torque to the coupling. We can set the Eccentricity by rotating screw (clockwise/anti-clockwise) on eccentric plate as specified. [4]

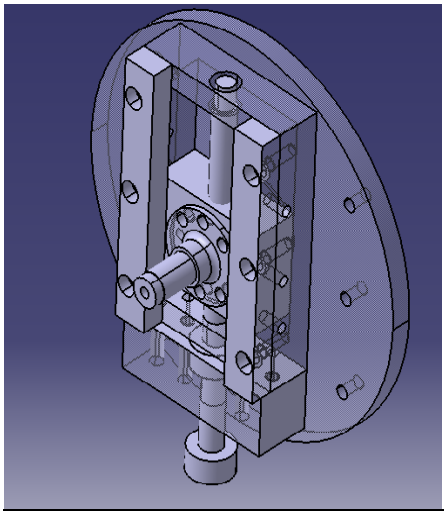

Fig. 4.1 General Arrangement to set Eccentricity

1.2 Chamber Angle Adjustment Arrangement:

This is simple technique used to give the chamber inclination to the coupling. The fixed side of coupling can be fixed in the slot or holes provided for required chamber angle inclination. The square bar and flat with slotting is used for this type of arrangement. We can set the inclination angle of coupling by moving fix end of the coupling fixture. After mounting the coupling fixture insert the pin through the slotted plates and coupling fixture holes.

Connect 415V, three phase, 50 Hz power supply. Start the motor with slow speed to check initially the set condition of angle. Ensure that the required angle is set correctly with eccentricity. If not, then set the eccentricity according for desire condition to get. Start the test with specific speed for specified cycles. After completion of cycle machine will stop automatically. If test to be continued, then increase the set number of cycle to required value. For new test, reset the counter to required value.

The above figure shows the mechanical arrangement of the coupling torque endurance test machine with Variable Torque and Chamber Adjustment.

To accomplish this, the following steps are followed:

- Starts concept building with help literature review.
- Prepare a CAD model from input parameters: specifications, sketch, photographs and hand measurements, using 3D Designing software Tool.
- Analyze its practical Boundary conditions and recommend required changes for design optimization.
- Finalization of fabricated test machine with required control panel for testing of sample.
- There should not be cracking and collapsing. If this should happen at highway speeds you could lose control of the vehicle.

V. RESULT AND DISCUSSION

The test machine is designed for the inputs given by the customer as follows.

SPECIFICATIONS		
1.	Max torque capacity	+/- 7 kgm.
2.	Max speed	200 rpm (3.3Hz) variable
3.	Chamber Inclination Adjustment	+/- 7° (max)
4.	Digital speed indicator	to indicate speed of the test
5.	Digital Counter	to count no. of cycles and stop the machine after set cycles are completed

The machine parts mostly made of mild steel material. The material's Young's modulus (E) is 210,000 N/mm2, poisons Poisson's ratio 0.38 and density 7.8×10^{-9} Kg/ mm^3. The machine components like shaft, selection of bearing, plumber block, key failure are designed based on mechanical fundamental. Standard available parts which ease for maintenance are most preferred for development of the machine. The optimization of critical parts done with the help of FEA analysis, gives optimum solution for problem. Some of the critical parts analysis as follows:

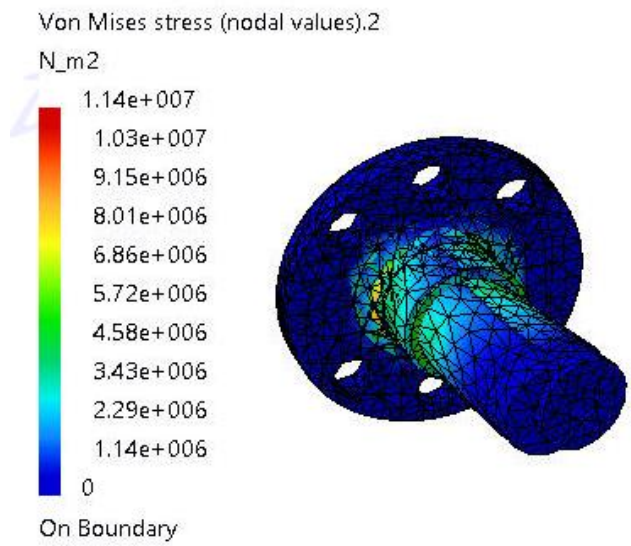

Fig 5.1 Von Mises Stress for Adjustable Eccentric Shaft

The flanged shaft inside adjustable eccentricity carries the maximum input force vale. Therefore it is analyzed with maximum input force of 1500 N with uniform loading over the area and fixed design constrained gives the above result of different stress value at different location of part. The red portion indicates the maximum stress which is within the limit.

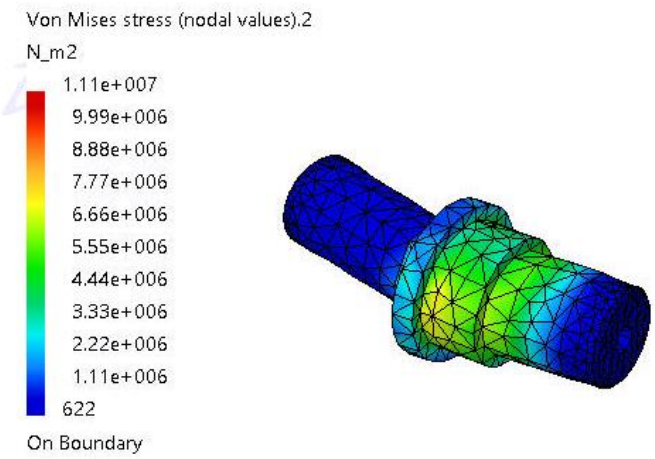

Fig 5.2 Von Mises Stress for Connecting Shaft

Another critical component connecting output shaft carries maximum output shaft. The same procedure is followed as mention above to get the result. .As per development requirement, it should be compact and fit for assembly constrain.

The overall selection of part with close to standard availability is consolidated in following table as,

Motor	40 hp / 30 kW, 1470 RPM, Frame: 200L, Make: Siemens
Pulley combination	i. 5"(On motor)-14" ii. 8"- 17.5"
Adjustable Eccentricity	0 to 75 mm
Inclination of the Coupling shaft	+/- 7° (max)

VI. ADVANTAGES & LIMITATIONS

1. Advantages –

- Machine is extremely easy to operate.
- Unskilled operators can also work.
- Time required is very less.
- Any component can be tested.
- Maintenance is very less.

2. Limitations –

- Any coupling of same type can be used, provided it has suitable job holding fixture.
- Cost is high according to the design.

VII.CONCLUSION

This is the new developing technique for testing coupling of the 3-wheeler that will be developed by us. In this system the torque transfer arrangement with adjustable chamber is developed with adjustable eccentricity. It is more flexible with more and more universal approach of solution for actual test condition for the testing. Being the simplest machine, it has a wide future scope in rubber-metal industries. Some of them have been listed as follows –

1. The bond testing machine can be system integrated & automated to achieve entire automation of the corresponding line.
2. The machine can be used for varieties of jobs with the help of flexible fixture.
3. Machine can be used as a demonstrator in educational field.
4. It can be effectively used for batch as well as mass production with the help of proper resources

REFERENCES

[1] Choon T Chon. "Analysis of tubular joint in torsion". *Journal of composite Materials, 16:268,1982*

[2] D.Chen and S. Cheng. "Torsional Stress in Tubular Lap Joint". *Journal of Solids Structures, 29(7):845-853,1992*

[3] Hibbeler, R.C. "Mechanics of Materials". *5th edition New Jersey: Prentice,2003*

[4] S. Robert, "Design and Construction of a Torsion Testing Apparatus", Senior Project, *Western New England College, 2005.*

[5] Glenn E. Vallee "Design and Development of an Economical Torsion Testing Machine", *Proceedings of the ASME , New England Section, 2006 Annual Conference*

[6] A. H. Muhr, M. Clotet, F. D. Persio, and S. Solanki, "Resistance of bonds in rubber components to corrosive environments" *in Elastomers and components; service life prediction, V. A. Coveney, Cambridge: Woodhead Publishing in Materials, 2006.*