Design, Analysis, and Modeling of XY Flexure Stage

Mayur A. Bhosale[1], Sharad S. Mulik[2],Uttamdas N. Gujar[3]
[1]PG Scholar, Department of mechanical Engineering, Trinity Academy of Engineering, Pune-48
[2]Associate Professor, Department of mechanical Engineering, Trinity Academy of Engineering, Pune-48
[3]Assistant Professor, Department of mechanical Engineering, Trinity Academy of Engineering, Pune-48

Abstract- **In micro-electro-mechanical system (MEMS) flexural mechanisms are widely used because of their advantages such as frictionless and wear less motion and high precision. Flexures depend on material elasticity for their functionality. In flexure mechanism motion is generated due to elastic deformation of the beam from which it is made. One of thetypical advantages of flexural mechanism is to gain precise deformation and flexibility to obtain motion in desired direction. This paper deals with design, analysis and modeling of XY flexure mechanism which is based on double parallelogram flexure(DFM). The XY mechanism presented has monolithic structure and it is based on double parallelogram flexure. Finite element model and analysis is carried out in ANSYS 14.5 Static analysis is done to find out force- deflection characteristics of mechanism. Parametric analysis is used to optimize design parameters of flexure beam. Finite Element Analysis (FEA) result validates analytical results of mechanism.**

Index Term-XY flexure mechanism, DFM, FEA

I. INTRODUCTION

Flexure mechanism is broadly used in micro-electro-mechanical systems. The working of flexure mechanism is based on material elasticity. Due to deformation at molecular level motion is generated hence the motion produced is free from friction and wear [1-3].A flexural mechanism is a single-piece flexible structure where the structural deformation is utilized to transmit force or deliver motion due to an input. It works as a transmission that is designed to have the desirable relation between the input actuation and the output to the environment significant deformations occur around the flexural beams [4]. The benefits of a flexural mechanism arelisted as below:

(i) Reduced backlash and no friction
(ii) continuous andSmooth displacement
(iii) Infinite resolution.

Flexural mechanism achieve their motion due to elasticity of material and deformation of their parts instead of rigid joint(bearingetc.) used in conventional mechanisms [5].

II. LITERATURE REVIEW

ShoryaAwtar,presentedanalytical modeling of different XY flexure mechanism having large range of motion and low parasitic error. The modeling of XY flexure mechanism is based on performance characteristics of building blocks such cantilever beam, parallelogram flexure and double parallelogram flexure used to build it. Comparison of linear and non-linear closed form analysis was discussed in this paper. To verify analytical results a prototype of 300×300 mm was manufactured and tested. The DFM has zero parasitic error and it can be used in precision applications [1].

ShoryaAwtar, presented topology design of XY flexure stage for large range of motion. To construct XY flexure stage single degree freedom flexure modules were used. Mathematical model was derived to find out performance characteristics. At the last analytical results were compared with experimental results. Constrain based topology design is presented[2].

Dongwoo Kang et.al,presented design and performance determination of a compact high precision XY-scanner having nanometer-level resolution as well as millimeter-level travel range. The presented XY-scanner is run with the help of voice coil motor (VCM). Author discussed a design that provides the optimal solution in terms of design variables. The XY-scanner was manufactured with optimized design values, and its performance was checked[4].

ShoryaAwtar, discussed a non-dimensional mathematical framework to determine performance characteristics of flexure modules and mechanisms. Author also presented the effect of elastokinematic non-linearitieson beams. With the help of finite element analysis the results were validated. A nondimensional analytical method is presented to determine performance characteristics flexure modules [3].

Vithun S N et al, presented a 2 dof flexure mechanism for nanopositioning stage. The mechanism is based on circular flexure hinge and has improved

compliance due to which parasitic error is minimized. Dynamic and static characteristics of mechanism were validated with finite element analysis. Stiffness of each component is considered in calculating overall stiffness of mechanism [5].

Sharad S. Mulik et.al, presented parametric analysis of flexural mechanism based on double parallelogram flexure module. FEA analysis was carried out to optimize design parameters of mechanism, the performance characteristics of two mechanisms were analyzed in this paper. The biflex mechanism has high accuracy dueto symmetric layout[6].

Xi Zhou et.al, presented a roll to roll microcontact printing (MCP) having large-area nanoscale patterning. The MCP stage is based on flexure mechanism and it has 500 nm precision and 0.05 N force control. The stage presented is fully automatic controlled. This stage is used in high speed patterning of silver and gold [7]. The DFM based mechanism high precision. This design presented is analyzed later in this paper.

III. DESIGN METHODOLOGY

Parasitic error is one of the performance measure in flexural mechanism and other one is angular rotation. Parasitic error is the unwanted, undesirable motion of motion stage. Angular rotation is twist of motion stage. Both parasitic error and angular rotation affects accuracy of motion stage. Parasitic error can be eliminated by using double parallelogram flexure module [DFM].

1.Double Parallelogram Flexure

Many types of flexure building blocks such as cantilever beam, parallelogram flexure, double parallelogram flexure, single axis hinge, multi axis hinge are used to design flexure mechanism [1]. Here the double parallelogram flexure is used to design of XY flexural mechanism.

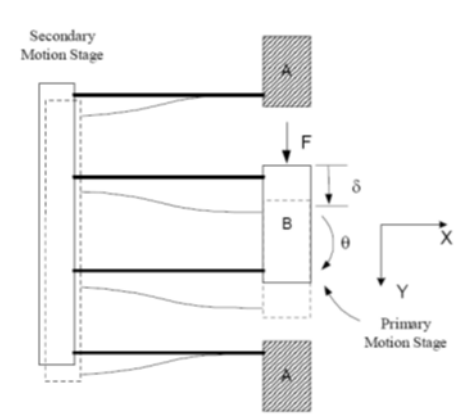

Fig. 1 Double Parallelogram Flexure [2, 6]

Fig 1 shows the double parallelogram flexure. It is also called a compound parallelogram flexure, folded-beam flexure. It allows deformation in Y-direction but is very stiff in X-direction. The parasitic error in X-direction is negligible because secondary motion stage absorbs any change in beam length due to deformation.

Deformation of primary motion stage is given by:-

$$\delta = \frac{FL^3}{12\ EI}$$

Where, δ = deflection, mm

F= Force applied, mm

L = Length of flexure beam, mm

E= Young's Modulus, N/mm^2

I= second moment of area of beam, mm^4

Stiffness of flexure module is

$$K = \frac{F}{\delta} = \frac{12\ EI}{L^3}$$

Where K= Stiffness of flexure module, N/mm

2.FlexureMechanism

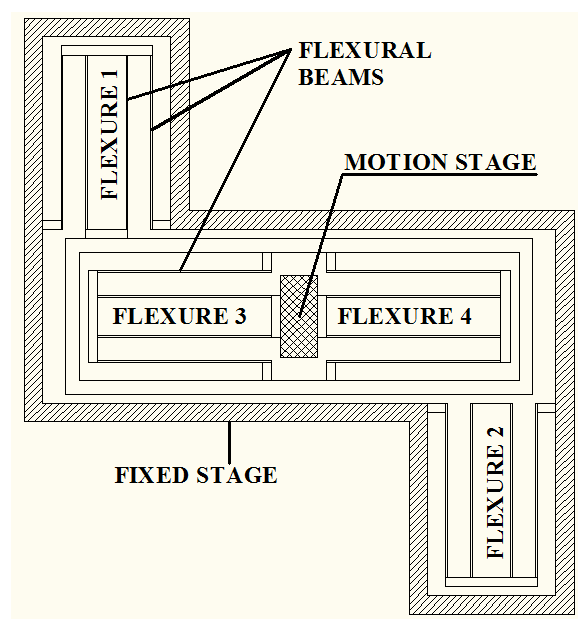

Fig. 2 XY Flexural Mechanism [7]

Design of XY flexural mechanism is shown in Fig.2. XY flexural mechanism is based on double parallelogram flexure module. There are two double parallelogram flexures in X and Y directions. These flexures acts as

springs attached parallel. Hence the total stiffness is addition of stiffness of two flexures calculated as below:-

Stiffness in X-direction

$$K_X = K_{Flexure1} + K_{Flexure2}$$

Similarly Stiffness in Y-direction

$$K_Y = K_{Flexure3} + K_{Flexure4}$$

Deformation of motion stage of XY flexure mechanism is given as below:

$$\delta_X = \frac{F}{K_X} \& \delta_Y = \frac{F}{K_Y}$$

For, Length=95mm, width=10mm, thickness=1mm

$$I = \frac{bt^3}{12} = \frac{10 \times 1^3}{12}$$

$$= 0.83333\,mm^4$$

$$K = \frac{12\ EI}{L^3} = \frac{12 \times 2.1 \times 10^5 \times 0.83333}{95^3}$$

$$=2.4493 N/mm$$

$$\therefore K_X = 2.4493 + 2.4493 = 4.8986 N/mm$$

∴ Deflection in X-direction

$$\delta_X = \frac{F}{K_X} = \frac{25}{4.8986} = 5.1034 mm$$

IV. FINITE ELEMENT ANALYSIS

1. Structural Analysis

After design of XY flexural mechanism by analytically the finite element analysis of same model is carried out in ANSYS software for comparison of theoretical and FEA results. In FEA static structural analysis and parametric analysis is done for optimization purpose.

The mechanism is modeled in CREO 2.0 and analyzed in ANSYS 14.5. The dimensions of flexure beam used to make model are l=95mm, b=10mm and t=1mm. material used is stainless steel (μ=0.3,E= $2.1\times10^5 N/m^2$) appliedforce is 25N. Fine type meshing is selected. Meshing parameters are as below:

Mesh Size: - 1 mm

No of nodes:-1051224

No of elements:-216930

Below fig.3 shows the boundary conditions forXY flexural mechanism.

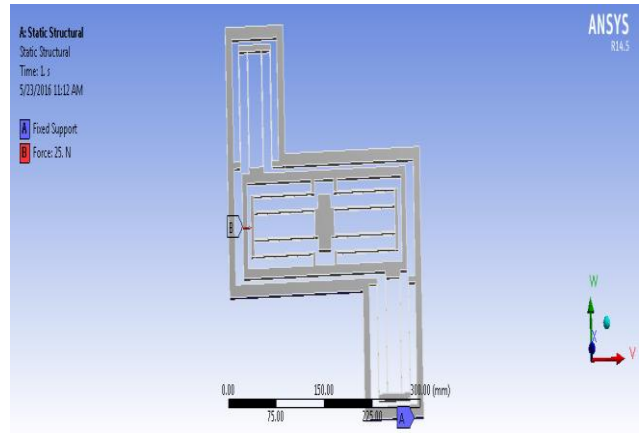

Fig. 3 Boundary Conditions

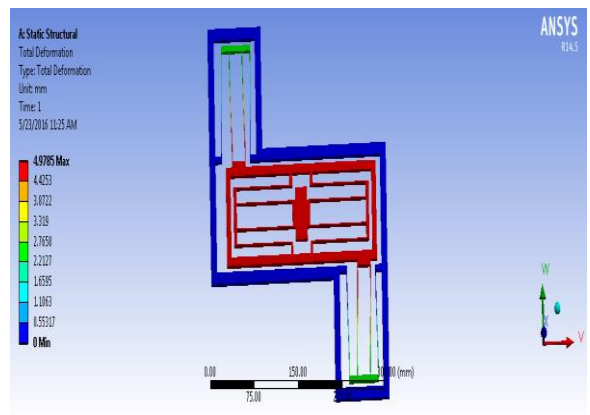

Fig. 4X Direction Total Deformation of Mechanism

Fig. 4 shows total deformation of mechanism in X-direction. Maximum value of total deformation is= 4.9785mm

Fig.5 shows equivalent Von-mises stress value and

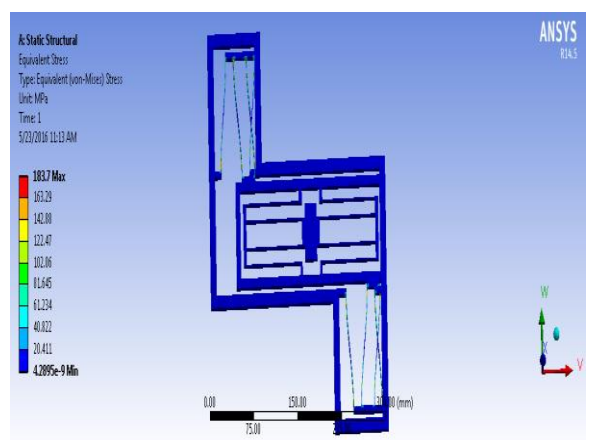

Fig. 5 Equivalent Von-Mises Stress

The maximum value of stress occurs in mechanism is 183.7Mpa.

Fig.6 shows parasitic motion of the mechanism

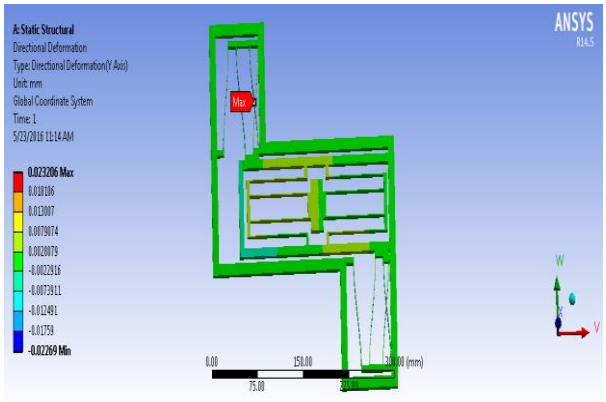

Fig 6 Parasitic Motion

The maximum value of parasitic error at motion stage was found to be 0.0030335 mm.

2. Parametric Analysis

In parametric analysis firstly input design parameters such as length, width and thickness are selected. Then these design parameters are defined while creatinggeometry and finite element model is generated.

Next boundary conditions (fixed support and force) are applied to this model. After this results are generated and output parameters like total deformation and equivalent stress are defined.

Finally values of input parameters are varied and results are interpreted with respect to these values.The procedure for parametric analysis is shown in fig 7.

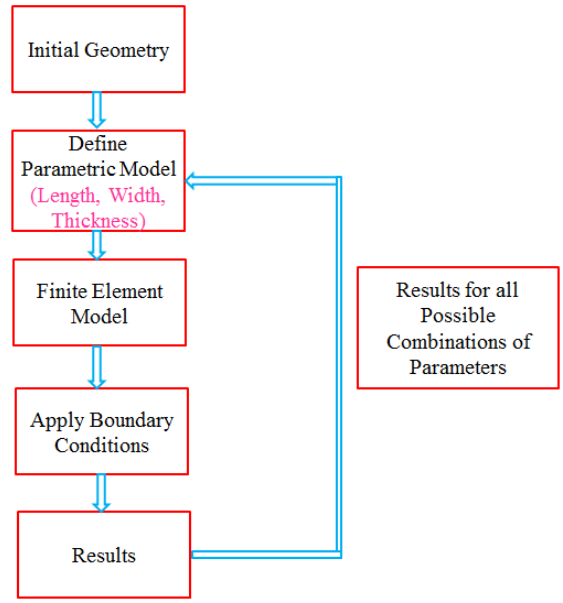

Fig 7 Procedure of Parametric Analysis

Parametric analysis is carried for optimization of design parameters of flexure beam such as length of flexure beam 'l', width 'b' and thickness 't'. Range selected for length 80, 85, 90 and 95mm, for width is 7, 8, 9 and 10mm and for thickness0.7, 0.8, 0.9 and 1mm.

Fig 8 and 9 shows the effect of change in length and width on deflection respectively.

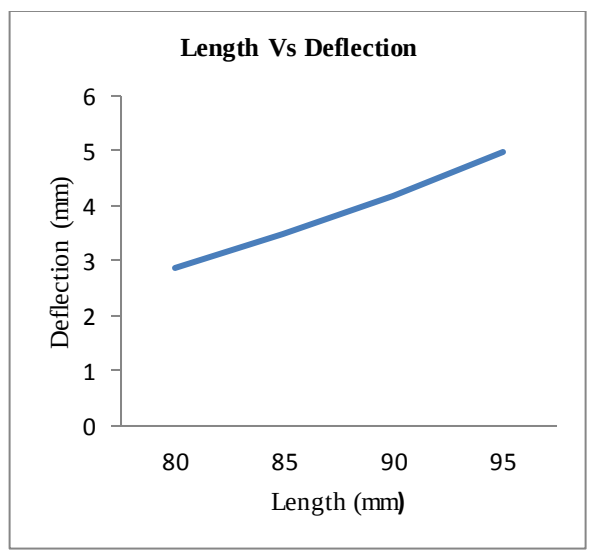

Fig 8 Plot of Length vs Deflection

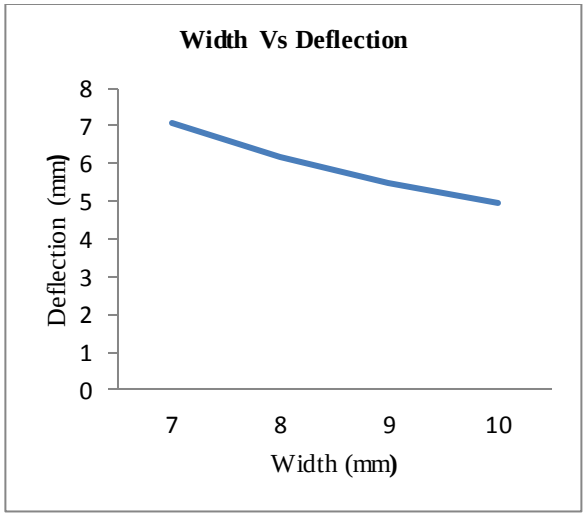

Fig 9 Plot of Width vs Deflection

Fig 10 shows the effect of variation in thickness on deflection

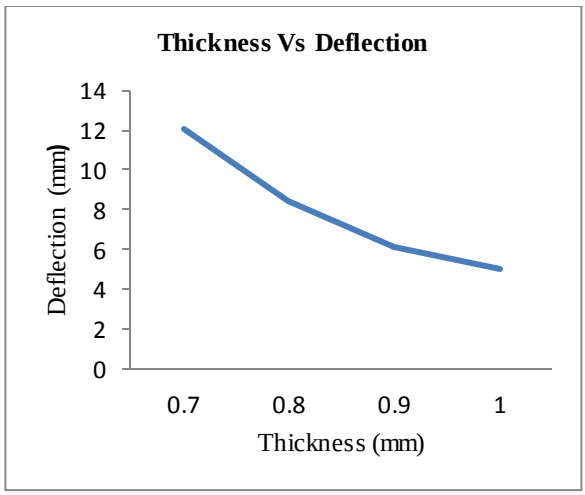

Fig 10 Plot of Thickness vs Deflection

From above three plots it is seen that deflection increase with increase in length and decreases with increase in width and thickness.

V. PROPOSED EXPERIMENTAL SETUP

Proposed experimental setup is shown in fig 11. To operate the system with computer installed graphical user interface software control desk integration of system is needed. Mechanism is connected to dSPACE controller. Voltage is supplied to voice coil motor after converting it to corresponding current. This current has low value so it is needed to amplify it and it is done by using Linear Current Amplifier (LCAM). Voice coil motor generates force and it is applied to mechanism. Voice coil motor has gain of 22.6 N/Amp.

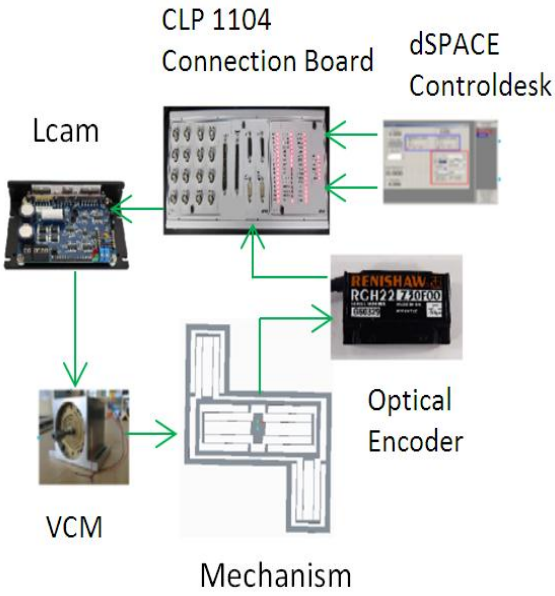

Fig. 11 Proposed Experimental Setup

Due to application of force motion is generated. This generated motion is detected by using optical encoder. Optical encoder used is Renishaw RGH22 made by Renishaw. It has resolution of 50nm. Next the signal from encoder is given to dSPACE. This signal is then compared with reference signal by using MATLAB Simulink and error signal is calculated which acts as actuating force. At last outputs of all the devices will be displayed using Control Desk. Control Desk acts as interface between system and user.

VI. RESULT AND DISCUSSION

Below table 1 shows the comparison of theoretical and FEA results and % error between theoretical and FEA results for Y-direction.

Table 1X-Direction Theoretical and FEA Results

Sr. No.	Force (N)	Deformation (mm)		% Error
		Theoretical	FEA	
01	5	1.0206	0.9957	2.4474
02	10	2.0413	1.9914	2.4474
03	15	3.0620	2.9871	2.4474
04	20	4.0827	3.9828	2.4474
05	25	5.1034	4.9785	2.4474
06	30	6.1241	5.9742	2.4474
07	35	7.1448	6.9699	2.4474

Table no 2 shows comparison of theoretical and FEA results with % error between them for Y-direction.

Table 2Y-Direction Theoretical and FEA Results

Sr. No.	Force (N)	Deformation (mm)		% Error
		Theoretical	FEA	
01	5	1.0206	1.011	0.94
02	10	2.0413	2.022	0.95
03	15	3.0620	3.034	0.91
04	20	4.0827	4.045	0.92
05	25	5.1034	5.055	0.95
06	30	6.1241	6.067	0.93
07	35	7.1448	7.077	0.95

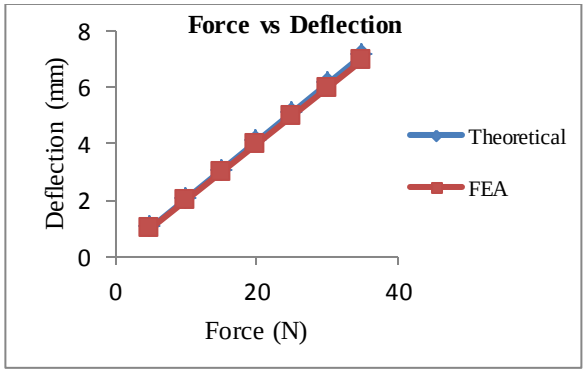

Fig. 12 Plot of Force Vs Deflection

From table 1, table 2 and fig 12 it is seen that the force-displacement curve is linear for both X and Y direction.

Table 3 Stiffness of Mechanism in X Direction

Sr. No.	Force (N)	Stiffness (mm)		% Error
		Theoretical	FEA	
01	5	4.8986	5.0215	2.4474
02	10	4.8986	5.0215	2.4474
03	15	4.8986	5.0215	2.4474
04	20	4.8986	5.0215	2.4474
05	25	4.8986	5.0215	2.4474
06	30	4.8986	5.0215	2.4474
07	35	4.8986	5.0215	2.4474

Table 4 Stiffness of Mechanism in Y Direction

Sr. No.	Force (N)	Stiffness (mm)		% Error
		Theoretical	FEA	
01	5	4.8986	4.9455	0.95
02	10	4.8986	4.9455	0.95
03	15	4.8986	4.9455	0.95
04	20	4.8986	4.9455	0.95
05	25	4.8986	4.9455	0.95
06	30	4.8986	4.9455	0.95
07	35	4.8986	4.9455	0.95

Table 3and table 4 shows the comparison of theoretical and FEA stiffness with % error for X and Y direction respectively. The errors between theoretical and FEA results is 2.4474 and 0.95% for X and Y direction respectively which are within acceptable limit.

VII. CONCLUSION

A XY flexural mechanism for displacement has been developed using double parallelogram flexure module. The theoretical results are verified using FEA results. The force deflection curve is linear. The slope of this curve shows stiffness which is constant. It is observed that error between FEA and theoretical results is less than 3 %. Mechanism has stiffness of 4.8986 N/mm. The mechanism has range of ± 5 mm for a force of 25N. The design parameters are optimized by using parametric analysis. Mechanism presented in this paper can be used in various precision applications such as atomic force microscope (AFM), laser cutting, laser surgery and scanning probe microscope.

REFERENCES

[1] S. Awatar,"Synthesis and Analysis of Parallel Kinematic XY Flexure Mechanism, Phd Thesis, Massachusetts Institute Of Technology, Cambridge, Ma, May 2004.

[2] ShoryaAwtar, Alexander H. Slocum, "Topology Evolution of High Performance Xy Flexure Stages", Precision Engineering, 2007.

[3] ShoryaAwtar, Alexander H. Slocum and EdipSevincer, "Characteristics of Beam-Based Flexure Modules", ASME Proceedings, 2007, pp 625-639.

[4] Dongwoo Kang, Kihyun Kim, Dongmin Kim, Jongyoup Shim, Dae-Gab Gweon, JaehwaJeong, "Optimal design of high precision XY-scanner with nanometer-level resolution and millimeter-level working range", Mechatronics 19 (2009), pp 562–570.

[5] Vithun S N, Narendra Reddy T, Prakash Vinod, P V Shashikumar, "Design and Analysis of a Single–Notch Parallelogram Flexure Mechanism Based X-Y Nanopositioning Stage", AIMTDR, December 2014.

[6] Sharad S. Mulik, Suhas P. Deshmukh, Rachel Patil, Amruta P. Patil, Haresh S. Monde, "Parametric Modeling and Analysis of XY Flexural Mechanism using FEA", IJMTER Special Issue of ICRTET,2015.

[7] Xi Zhou, Huihua Xu, Jiyi Cheng, Ni Zhao & Shih-Chi Chen, "Flexure-based Roll-to-roll Platform: A Practical Solution for Realizing Large-area Microcontact Printing", Scientific Reports, June 2015, pp 1-10.