International Engineering Research Journal Page No 780-784

International Journal for XXXXXXXXXXXXXXXXXXXXXXXX (XXXXXX) ***volume X Issue Y–February 2016***

ANALYSIS AND PERFORMANCE EVALUATION OF SERRATED MOULDED FRICTION LINING BAND IN BAND BRAKES

Vinay V. Patil[1], P.D.Kulkarni[2]

PG Student, Department of Mechanical Engineering, SIT Lonavala-410401[1]
Prof, Department of Mechanical Engineering, SIT Lonavala-410401[2]

Abstract-This paper proposes a new method for evaluating the braking system on de-coiler machine rotor brake, where the braking force though not very high but the frequency of braking per minute is dependent on production cycles per min. This frequent braking results into excessive heat leading to brake glaze. Here the heat dissipation by the band brake plays a significant role in the service life of the liner. The Evaluation indexes, braking capacity, response speed control accuracy and braking efficiency, are put forward accordingly. The experimental apparatus to the performances of brakes are built by measuring the relation between the braking effort, torque and rotation speed. Theoretical analysis and experiment are based on maximum effort applied on the band moving end to bring the rotor to zero from top speed.Quantitative analysis, the value analysis is done to evaluate the indexes. Selection of material, geometry and then modeling, analysis is done to evaluate the theoretical and analytical strength parameters.

***Keywords*–Braking, Braking Performance, Braking Systems, Model and Analysis.**

I. INTRODUCTION

Band brakes find application in braking in various field of application such a material handling equipment, lifts ,and hoist. Material transport equipment like conveyors, trolleys, etc. Many machines use a continuous feed arrangement with intermittent brake for product forming. Band brakes are common in these examples but with applications where the braking effort is not important but the frequency of braking leads to excessive heating the problem of band glazing is frequent. Glazing reduces the coefficient of friction between the brake drum and the brake liners starts to slip and thereby inaccurate positioning of the said load.

Conventional geometry of liners were made as plain geometry. Due to this geometry the heat produced and no ventilation leads to a partial vacuum created between brake liner and the drum which will lead the brake liner to stick on to the drum leading to brake 'jab' or brake lock, which further leads to inaccuracy of machine.

It is the friction pads or facings that actually absorbs the power from the drum to stop the machine. There are gaps on the surface of the braking pads. This prevents the pads from sticking to the brake lining onto the drum. The gaps break any vacuum that might form and cause the facing to stick to the drum.

Thegeometry pattern under discussion is as shown below.

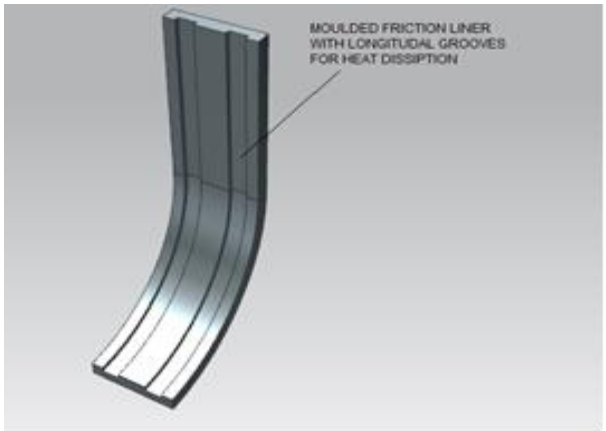

Fig.1 Friction Pad/Facing With Grooves

II. DESCRIPTION OF TEST RIG AND EQUIPMENT

The following figure shows the setup required for testing and performance analysis of band brake liner.

Fig.2 Test-Rig Used For Testing of Band Brakes

The test rig is mainly consists of a single phase AC motor with variable speed. This motor is coupled to an open belt drive that further drives a spur gear train which finally drives a drum on which the friction band that operated for braking. The

band here used is of molded condition made of the selected friction material. The application of the braking force is carrying out using an electrical solenoid. The assembly issupported using a frame mounted on the base plate.

DIMENSIONAL SPECIFICATION OF LINER

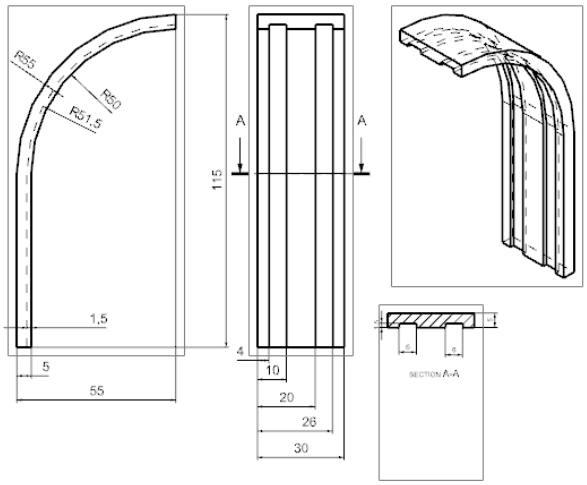

Fig.3 Specifications of Liner

Dimensions of brake pads are as per the design. The thickness of liner is 5mm. Grooves of 6mm and 1.5mm in depth are provided for preventing the brake liner to stick to the drum surface.

Maximum effort applied on the brake is 5.4 kg to bring the brake drum running at top speed of 600 rpm to zero. Thus, the band brake will be tested for two conditions namely the compressive nature of load when brake effort is applied and the moment is applied by the motor system. The liner will be analyzed using ANSYS 16.0 to find the maximum stress and maximum deformation under both conditions.

III. MATERIAL

Brake lining HC AF 393 is a rigid molded Non-Asbestos Friction material in a dark gray color. It contains short filament of synthetic man-made mineral fibers and organic fibers with highly thermally stable "novalak" phenolic powder resin as a binder and fused in a matrix which contributes to the strength and performance regarding friction/wear properties.

Compo HC AF 393 has excellent fade and wear resistance and good recovery characteristics.

A. Physical Properties

Density	: 1.9
Coefficient of Friction	: 0.42
Hardness	: 85 in Rockwell HRL
Cross Breaking Strength	: 400 kg/cm^2

IV. MODELING AND ANALYSIS OF BRAKE LINER

A. *3D MODEL of BRAKE LINER*

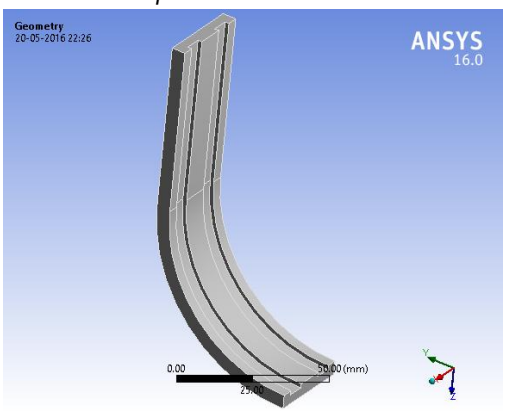

Fig.4 3D Model of Brake Liner

B. *ANALYSIS OF LINER CONSIDERING MAXIMUM EFFORT*

The analysis of brake liner was carried out using ANSYS-16. The analysis was carried out for maximum effort applied to the brake to halt the drum. The effort of 5.4 kg applied to the brake and the analysis is carried out.

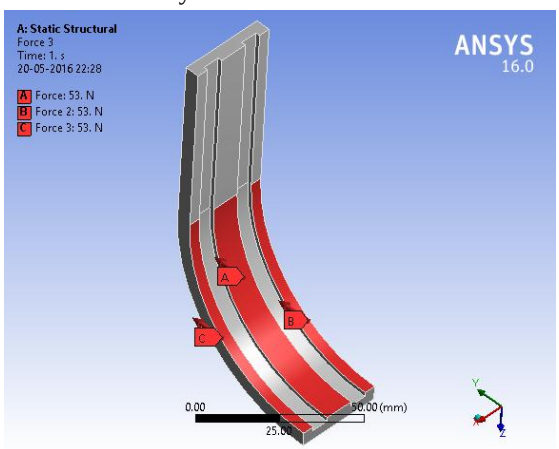

Fig.5 Force Applied on Liner

The force of 5.4kg was applied to the braking pad as shown in fig. The result for which are obtained as given in below figures.

Maximum stress produced on liner was 0.364 N/mm^2.Thus, the maximum stress on the liner is far less than allowable stress which is 36 N/mm^2. So it is safe under the action of the maximum braking effort.

The total deformation observed due to the maximum effort is negligible as shown in fog.

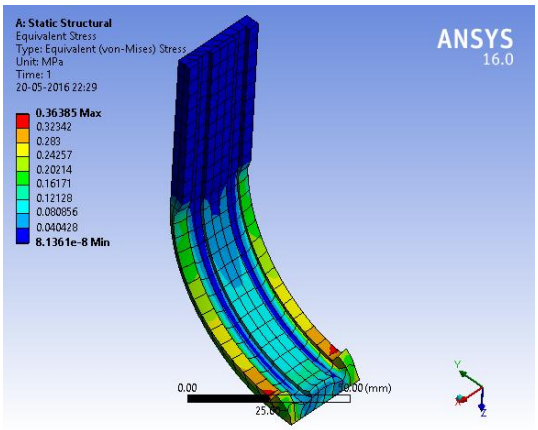

Fig.6Result For Stresses

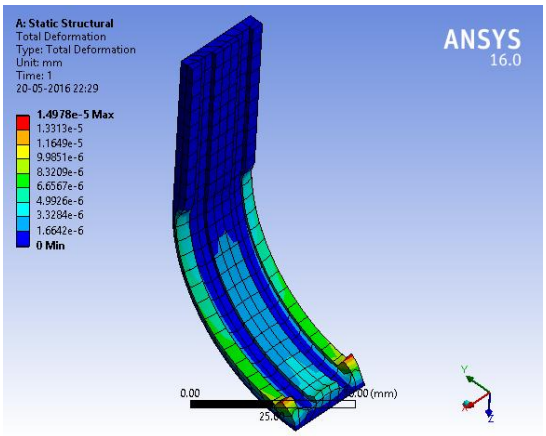

Fig.7 Result for deformation

C. ANALYSIS OF LINER CONSIDERING MAXIMUM MOMENT ACTING ON LINER DUE TO POWER TRANSMITTED BY DRUM

The analysis is carried out for the maximum braking moment acting on the liner due to the power transmitted by the drum. The moment of 1200 N-mm is applied on the axis of the curved liner and the analysis is carried out.

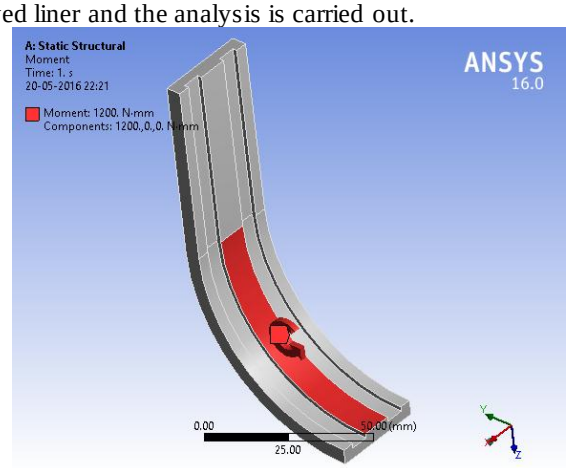

Fig.8 Moment Application

The moment of 1200N-mm was applied to the axis of the braking pad as shown in fig. and the results for which are obtained as given in below figures.

The maximum stress produced on liner is0.144 N/mm^2.Thus, the max stress on the braking liner is far less than allowable stress which is 36 N/mm^2. So the liner is safe under the action of maximum torque transmitted by the system.

The total deformation observed due to the maximum effort is negligible.

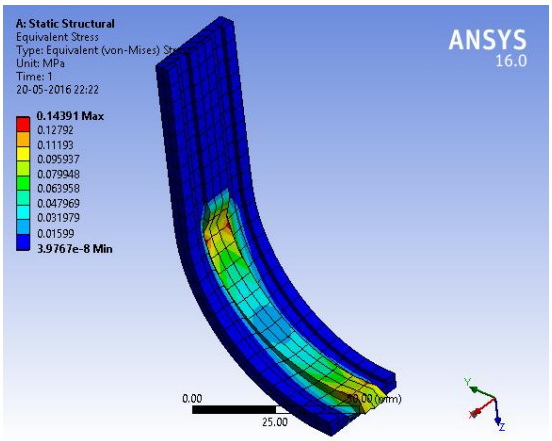

Fig.9 Result for Stresses

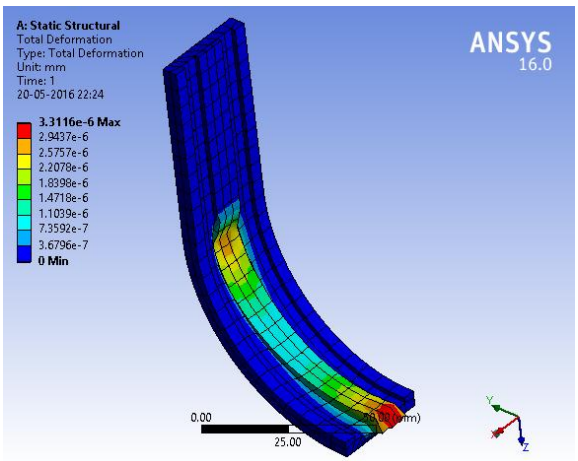

Fig.10 Result for Deformation

V. TESTING AND PERFORMANCE EVALUATION OF SERRATED LINERS

Input Data

Diameter of load drum = 82 mm

Procedure for Testing

1. Start motor
2. Load the loading pan on to the effort lever
3. Add 1.0 kg weight to the load pan
4. Note speed of drum
5. Add 0.5 kg load

6. Note speed of drum
7. Plot graph of Load Vs Speed
8. Plot graph of Power Vs Speed
9. Plot graph of Brake power Vs Speed

TABLE I
TESTING RESULTS AND PERFORMANCE ANALYSIS

LOAD	SPEED	TORQUE	BRAKE POWER
1	518	0.40221	21.82064329
1.5	480	0.603315	30.32985168
2	440	0.80442	37.06981872
2.5	401	1.005525	42.23010599
3	347	1.20663	43.85191055
3.5	321	1.407735	47.32720606
4	265	1.60884	44.65228164
4.5	226	1.809945	42.8409155

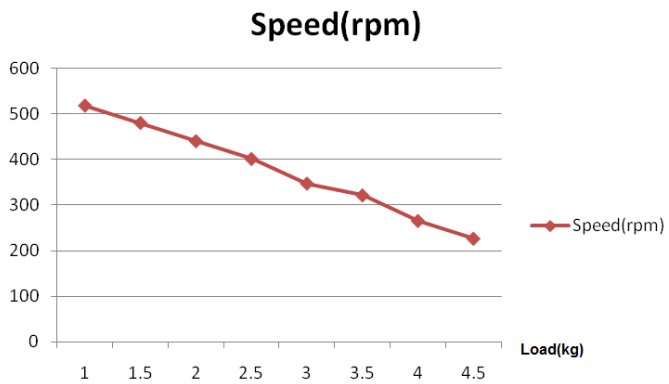

Fig.11Load Vs Speed Graph

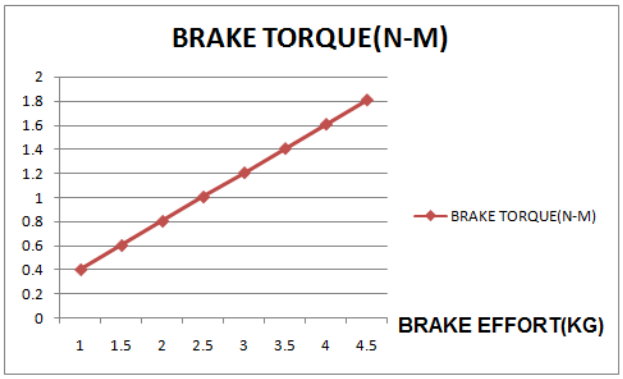

Fig.12 Braking Effort Vs Brake Torque

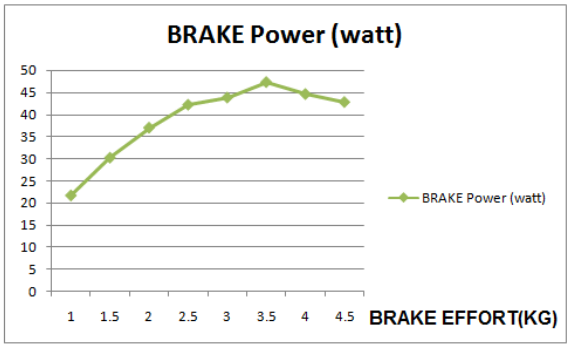

Fig.13Braking Effort Vs Brake Power

VI. CONCLUSION

- Serrated molded brake liner was safe under the action of maximum brake effort so also the deformation under the action of maximum brake effort.
- Serrated molded brake liner is safe under the action of the maximum moment so also the deformation under the action of the maximum moment.
- With the increased in the brake effort the speed of the drum drops indicated good conversion of braking effort into retardation of the drum.
- With the increased in the brake effort the brake torque applied, also increases resulting into the effective braking.
- Brake power absorbed is maximum upto 3.5 kg effort but slightly reduces thereafter indicating that 3.5 kg load is the optimal effort for the maximum braking effect.
- Serrated liner shows the effective strength and braking properties for given application.

VII. FUTURE WORK

There aremany scopes for working on this topic as-

Instead of using serrated band some other types like parted type band, uniform band, and a band with the gesture can be used for testing and analysis purpose.

Band with different materials will be analyzed and tested.

ACKNOWLEDGMENT

I gratefully acknowledge my project guide Prof. P.D.Kulkarniand HOD of the Department Dr. V.V.Shindefor his guidance and support. I thank him for the encouragement and support he has given me for the project. I thank our Principal Dr. M.S.Gaikwadand all my professors for imparting their knowledge and their support.

Last but not the least I am thankful to all those people who helped in the project activities and also my parents and family for supporting and believing in me.

REFERENCES

[1] D. Catica, J. Glisovica, (2014). "Analysis of Failure Causes and the Criticality Degree of Elements of Motor Vehicle's Drum Brakes," Tribology in Industry, 36(3), pp.

[2]J.R.Laguna-Camacho, G. Jaurez-Morales, C.Calderon (January 2015)."A study of the wear mechanisms of disk and shoe brake pads," Engineering Failure Analysis, ELSEVIER, pp.

[3]Zhiqiang Li, Jainmin Han, Zhiyong Yang (May 2014),"The effect of braking energy on the fatigue crack propagation in the railway brake discs," Engineering Failure Analysis, ELSEVIER, pp.

[4] M. Collignon, A-L. Cristol, P. Dufrenoy, (January 2012)."Failure of truck brake discs: A coupled numerical–experimental approach to identifying critical thermomechanical loadings," Tribology International, ELSEVIER, 59(2013). pp. 114-120.

[5]Zhiyong Yang, Jianmin Han, Weijing LI, (July 2013). "Analyzing the mechanisms of fatigue crack initiation and propagation in CRH EMU brake discs," Engineering Failure Analysis, ELSEVIER, pp.

[6] Bing Xu, Min Cheng, Huayong Yang, (October 2013). "Safety brake performance evaluation and optimization of hydraulic lifting systems in case of overspeed dropping," Mechatronics, ELSEVIER, 23(2013), pp. 1180-1190.

[7]MostefaBouchetara, (2014)."Thermomechanical Analysis of Vehicle Braking," ISSN, Dept of Mechanical Engineering, 76, pp. 1454-2358.

[8] A.M. Zaharudina, R.J. Talib, (2012)."New Natural FibreReinforced Aluminium Composite for Automotive Brake Pad," International Journal of Mechanical and Materials Engineering, Dept. of Manufacturing and material engineering, 7(2). Pp. 166-170.

[9]P.S.Bankar, S. N. Khan, (2013). "An Experimental Study and Analysis of Different Frictional Materials for Application of Band Brake," International Journal of Advances in Engineering Science and Technology, Dept. of Mechanical Engineering, Pune University. Pp. 2319-1120.

[10]Yogesh Anil Kharch, Prof. DheerajVerma, (2015). "Design and Fem Based Analysis of Disc Brake for Four Wheeler," International Journal of Pure and Applied Research in Engineering and Technology, 3(7), 56-62.