Finite Element Analysis of Friction stir welded Aluminum Alloy AA6061for Different Tool Pin Profiles

S.K.Barik[1], Prof. A.S. Ugale[2],

[1,2] *TSSM's BSCOER, Narhe, Pune- 41, India*

[1,2]*Dept. of Mechanical Engineering*

[1]sachin.tichkule33@gmail.com

[2]ajayugale@rediffmail.com

***Abstract*— Friction stir welding (FSW) is a relatively new solid state welding process invented by The Welding Institute (TWI), Cambridge, UK in 1991 and has emerged as a new process for welding of aluminum alloys. The welding process of high strength aluminum alloys as AA6061, AA6082, AA3651, etc. which are difficult to weld by conventional fusion welding techniques. In this paper, the modeling of friction stir welding tool along with simulation of peak temperature induced in plate material and flow stresses generated in the same for friction stir welding of AA6061 is to be carried out by using the FEA software. The simulation is to be carried out for friction stir welding tools with four different tool-pin profiles modeled. The results are presented for variations in peak temperatures of aluminium alloy plate as well as flow stresses generated at and around the tool pin during the process.**

Keywords: Modeling of FSW tools, Peak Temperature, Flow Stress, AA6061 and Simulation.

I. INTRODUCTION

A method of solid phase welding, which permits a wide range of parts and geometries to be welded is called as "Friction Stir Welding" (FSW), was invented by W. Thomas and his colleagues of The Welding Institute (TWI), UK, in 1991 [1]. Initially, the process was regarded as a "laboratory" curiosity, but it soon became clear that FSW offers numerous benefits in the fabrication of aluminum products. Friction stir welding is essentially a solid state joining process, widely used for the welding of light and difficult to weld metals and their alloys like aluminum, magnesium, copper etc. Recently, its applications have been extended to the welding of high melting point materials such as various types of steels, Ti alloys, Ni-based super alloys, the welding of metal matrix composites and polythene [3].

Friction stir welding seems to be very reliable technique as it permits welding of aluminum alloys while avoiding the drawbacks of fusion welding. Problems including porosity formation, solidification cracking, and chemical reaction may arise during fusion welding of dissimilar materials although sound welds may be obtained in some limited cases with special attentions to the joint design and preparation, process parameters and filler metals [2]. This process has made possible to weld a number of aluminum alloys that were previously not recommended (2000 series & copper containing 7000 series aluminum alloys) for welding. Because the material subjected to FSW does not melt and re-solidify, the resultant weld metal is free of porosity with lower distortion. An added the advantage that it is an environmentally friendly process. FSW is a solid state, localized thermo mechanical, joining process [3].

In FSW, a non-consumable rotating shouldered-pin-tool is plunged into the interface between two plates being welded, until the shoulder touches the surface of the base material, and then tool is transverse along the weld line. In FSW, frictional heat is generated by rubbing of tool shoulder and base material surface. During traversing, softened material from the leading edge moves to the trailing edge due to the tool rotation and the transverse movement of the tool, and this transferred material is consolidated in the trailing edge of the tool by the application of an axial force. FSW parameters are tool geometry, axial force, rotational speed, transverse speed and tool tilt angle [1].

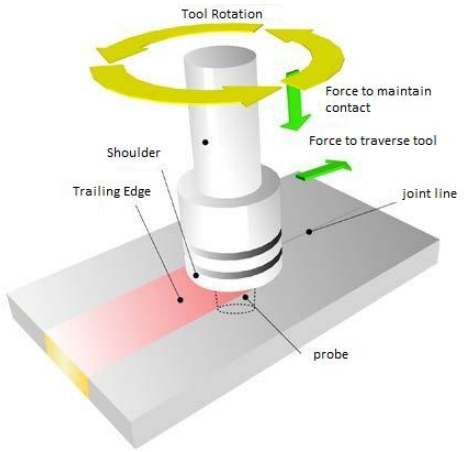

Fig. 1.Schematic of the Friction Stir Welding Process [2]

As Shown in fig.1, Friction stir welding (FSW) is a simple process in which a rotating cylindrical tool with a shoulder and a profiled pin is plunged into the abutting plates to be joined and traversed along the line of the joint. The plates are tightly clamed on to the bed of the FSW equipment

to prevent them from coming apart during welding [2]. A cylindrical tool rotating at high speed is slowly plunged into the plate material, until the shoulder of the tool touches the upper surface of the material. A downward force is applied to maintain the contact. Friction heat, generated between the tool and the material, causes the plasticized material to get heated and softened, without reaching the melting point. The tool is then traversed along the joint line, until it reaches the end of the weld. As tool moved in the direction of welding, the leading edge of the tool forces the plasticized material, on either side of the butt line, to the back of the tool [5]. The friction stir welding of AA6061 is to be carried out by using the FEA software. The simulation is to be carried out for friction stir welding for different tool-pin profile modeled (CAD) with four pin profiles as (i) Conical pin (frustum of a cone), (ii) Hexagonal pin, (iii) Trapezoidal pin and (iv) Cylindrical threaded profiles were used. The results are presented in peak temperatures of aluminium alloy plate as well as flow stresses generated at and around the tool pin during the process.

II. LITERTURE REVIEW

The literature study of Friction stir welding process reveals that the welding process was started a few decades ago. Number of experiments and theoretical studies are carried out on this process. Before performing any experiments, literature review is done to get some overview of process parameters, their effect, values, range etc. they are number of researched worked on friction stir welding and we are going to study few papers.

D.Raguraman and L.A.Kumar conducted experiment which involes the several FSW tools have been considered for the fabrication of a number of butt joints. The tool geometry names are as follows: straight threaded tool, tapper threaded tool, inverse tapered tool and concave shaped fluted tool. These geometries are analyzed for the identification of sound weld through ANSYS. This technique, which refers to “frication plunge welding”, provides a very simple method of joining a base metal through tool pin. Tool with three different probe lengths were used to join the aluminum sheet with different tool rotational speeds and tool holding times. The former decreased with increasing probe length at the shortest tool holding time and the slowest tool rotational speed, but there were no discernible differences in other welding conditions [1].

Santosh N and Mahamad Mudabir investigate the thermomechnical modeling of friction stir welding process is carried out by using general purpose Finite Element analysis (FEA) simulation tool ‘Altair Hyper works’ to evaluate the important physical aspects of FSW. The core process model governs the heat generation by friction between tool and work piece. The analysis that for the constant tool traverse rate and increasing tool rotation speeds the peak temperatures during welding are increased leading to lower flow stress. The total heat input decreases which leads to decrease in temperature, increasing the flow stress required for continuous deformation of material for joint formation [2].

Mr. Uday A Dabade and Mr. Tejas. Patile studied that the friction stir welding is high carbon and high chromium ($HCHC_r$) tool steel with tapered cylindrical pin shape having 50-55 HRC is used. It is having extremely high wear resisting properties, good softening resistance at elevated temperature, fine carbide size and grain size with high toughness and can withstands the impact load. The experiments were performed using AA 6082-T651 aluminum alloy as a work piece. In this experimental work tool rotational speed (rpm), welding speed (mm/min) and axial force (Newton) as process parameter. The main response variables were weld quality and weld strength. Design of experiments (DOE) was carried out by using Taguchi method and analysis of experiment will be carried out by using MINITAB 16 software. Optimization of multiple response variables was performed using grey relational analysis (GRA) [3].

Jaimin B. patel, K.D.Bhatt and Maulik shah conducted experiments which involves the modeling of friction stir welding tool by replacement of tool-pin profile along with simulation of peak temperature induced in plate material and flow stresses generated in the same for friction stir welding of AA6061. The modeling has been carried out by using the FEA software. The simulations has been carried out for FSW tools four different too-pin profile modeled and results are presented for variations in peak temperature of aluminum alloy plate as flow stresses generated at and around the tool pin during the welding process [4].

Mr. Omid A. Zagar studied those three types of tools, straight cylindrical, taper cylindrical and triangular tool all made high speed steel (Wc-Co) used for the friction stir welding aluminum alloy H20-H20 and the mechanical properties of the welded joint tasted by tensile test and vicker hardness test. The design of welding parameter optimization for different types of friction stir process like rotational speed, depth of welding, travel speed, type of material, type of joint, work piece dimension, joint dimension, tool material and tool geometry. This paper can open a new horizon in experimental investigation of mechanical properties for friction stir welded joint with other different type of tools like oval shape probe, paddle shape probe, three flat sided probe and three sided re-entrant probe and other material like titanium or steel [5].

Mr. S.R. Bhasale, Prof. M.K. Wasekar studied the tool material selection of the process parameters. The tool material selection depends on the operational parameters such as temperature of the operation, were resistance, geometry and load bearing ability also the tool degradation process. Tool design is important only the material removing from metal also the material heating and mixing by frictional heat. Also tool must be meet several important requirements. The paper shows that various types of tool geometries and importance of tools for friction stir welding of AA6063 with this paper. It also shows the operational parameter selection as per the specimen size which can be used for the process. The joining does not involve any of filler metal and therefore any aluminum alloy can be joined without concern for the compatibility of composition, which is an issue in fusion material [6].

R. Hariharan and R.J, Goldenren carried out using a CNC on (AA 6061 & 7275) alloy. The tool geometry was carefully chosen and fabricated to have a nearly flat welded interface (cylindrical & taper) pin profile. The process parameters that control the quality of the weld are a) rotation

speed (1600 & 1250 rpm) b) traverse speed (120mm/min) and c) tool tilt angle 2^0 and these process parameters were optimized to obtain defect free welded joints. The main aim of this topic is to find the mechanical properties of friction stir welding of dissimilar aluminum alloys (6061 & 7075) by using CNC vertical milling machine. The limitations of FSW are reduced by intensive research and development [7].

D.Muruganadam and T.kumar are studied similar & dissimilar FSW metals using rotating tool. Many of material like aluminum alloy 2000, 6000 and 7000 series have been joined using this technique. The influence of tool pin profiles for FSW process is some of important area is research. Mechanical characterization is similar & dissimilar combinations of micro structural for FSW [8].

III. MODELING OF VARIOUS TOOL-PIN PROFILES

Aluminium alloys are designated based on international standards. These alloys are distinguished by a four digit number which is followed by a temper designation code. The first digit corresponds to the principal alloying constituent. The second digits correspond to individual alloy variations. Finally the temper designation code corresponds to different strengthening techniques. For conducting the simulation of friction stir welding of two plates of AA6061 of size 341 mm x 117 mm x 5 mm thick, three FSW tools modeled with four pin profiles as (i) Conical pin (frustum of a cone), (ii) Hexagonal pin, (iii) Trapezoidal pin and (iv) Cylindrical threaded profiles (Fig.3) were used. The welding speeds were selected as 4.21 mm/sec, temperature of plate =30° c and rotation speed was kept as 700 rpm constant. The tool tilt angle was maintained at 0°. In each weld simulation, the tool plunge was kept constant at 4.2 mm with an axial force of 16 KN.

Table-1 Physical and Thermal properties of AA6061

Property	Values
Density	2.7 g/cm^3
Melting Point	580-652^{0}c
Modulus of Elasticity	68.9GPa
Poisons Ratio	0.33
Thermal Conductivity	167W/m-K
Specific Heat Capacity	0.869J/g-^{0}c

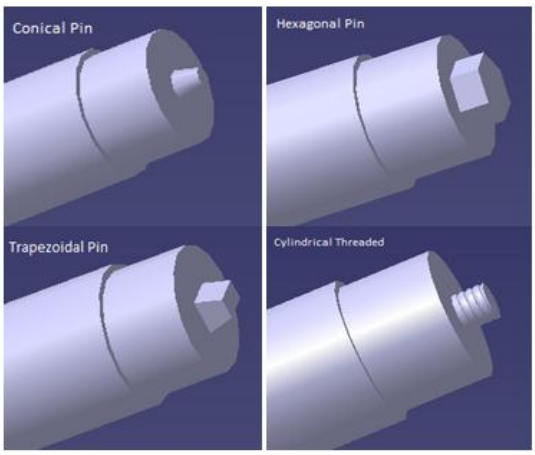

Fig.3. FSW Tools with different Tool-pin Profiles.

The material of the tool selected was cold work die steel with 1.6% carbon & 12.9% Cr. The dimensions of the FSW tools used for simulations are shown in fig.3.1 ((a), (b), (c) and (d)):

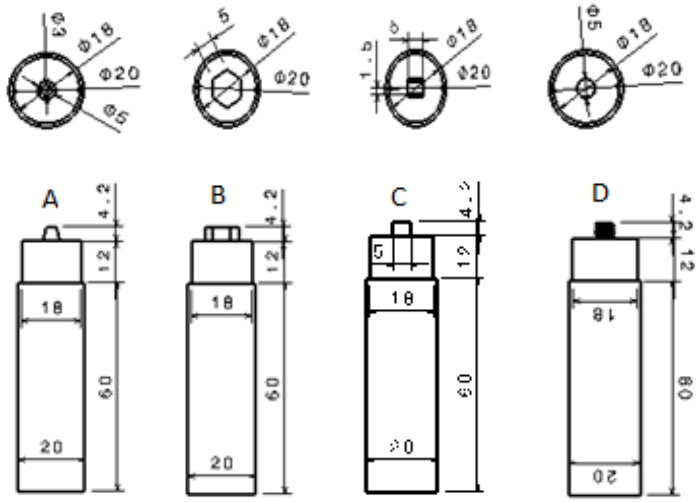

Fig.3.1.Tool Dimensions a) Conical Pin, b) hexagonal Pin, c) Trapezoidal Pin, d) cylindrical Threaded Pin

V. THERMO MECHANICAL MODELLING

Thermo mechanical modeling and simulation of friction stir welding was done using the finite element software. Computer-aided engineering simulation software by name Altair Hyper works was used for modeling and simulation. A three dimensional thermo mechanical model for butt joining of aluminium plates was developed and solved using HyperXtrude solver. The accurate values of temperature fields, strain rate, effective strain and flow stress during the joint formation were predicted for varying range of process parameters. The thermo mechanical modelling and simulation of the Friction stir welding necessitated the thorough description of certain critical parameters, specifying boundary conditions, post processing.

A. Process Modelling Input

It is very important to prepare correct input for process modelling. Process modelling input is discussed in terms of geometric parameters, process parameters, and material parameters considered during the friction stir welding process.

B. Geometric Parameters

While modelling a friction stir welding process, the starting work piece geometry and the tool geometry need to be defined. The geometric parameters for butt weld joint modelling are length, width and thickness of the plate geometry. Pin diameter, pin height, shoulder diameter and shoulder height are used to define the tool geometry.

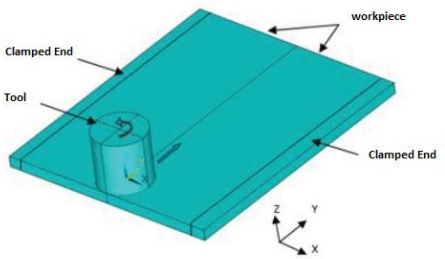

Fig. 4.Geometric model developed in the software

C. Process Parameters

The typical process parameters to be considered in a friction stir welding process include,

- The typical process parameters to be considered in a friction stir welding process include,
- The work piece temperature
- Tool translation speed
- Tool rotational speed
- Coefficient of friction between tool and work piece
- Normal force applied by shoulder on the work piece
- Top and bottom surface heat losses

D. Tool and Work Piece Material Properties

In order to accurately predict the temperature fields and metal flow, it is necessary to use reliable input data. Material properties that relate to both heat transfer and deformation need to be defined. The material properties commonly used for heat transfer modelling are the thermal conductivity, heat capacity, and emissivity of the work piece and tool materials. These properties are usually defined as a function of temperature. The flow stress of the work piece material is very important for the correct prediction of metal flow behavior. It is usually defined as a function of strain rate and temperature. The Young's modulus, the Poisson's ratio as a function of temperature, and the thermal expansion coefficients of the work and tool materials are important parameters for simulating the friction stir welding process.

E. Element Type

Hex20 elements were used for thermo mechanical modeling; these elements are 3D (2nd order) hexahedra elements with 20 nodes ordered.

F. Boundary Conditions

a. Tool and Work Piece interface conditions

The tool shoulder provides heating and constrains the deformation zone, while the probe shapes the deformation path that seals the joint and also generates a proportion of the heat, depending on the tool dimensions. The tool rotates at high speeds, such that the peripheral speed of the shoulder and probe is very much greater than the translational speed. Friction stir welding primarily uses viscous dissipation in the work piece material, driven by high shear stresses at the tool/work piece interface.

b. Coefficient Friction (μ)

The simplest estimates of Coefficient friction considering a purely rotating tool shoulder (neglecting the translation velocity) by analogy with conventional rotary friction welding.

c. Thermal Boundary Conditions

The frictional and plastic heat generated during the FSW process propagates rapidly into remote regions of the plates. On the top and side surfaces of the work piece, convection and radiation account for heat loss to the ambient, while the Conduction losses occur from the bottom surface of the work piece to the backing plate.

G. Post Processing

Post processing is an essentially part of any analysis, henceforth with the necessary parameters described and boundary conditions specified the post processing was carried out in the Hyperworks software and temperature distribution contours, and flow stress contours were obtained.

VI. RESULTS OF SIMULATIONS

For all geometries element size is taken as 2mm.the meshing will makes the numbers of element and nodes. The mesh formation of the different tool geometries are shown in fig.5.

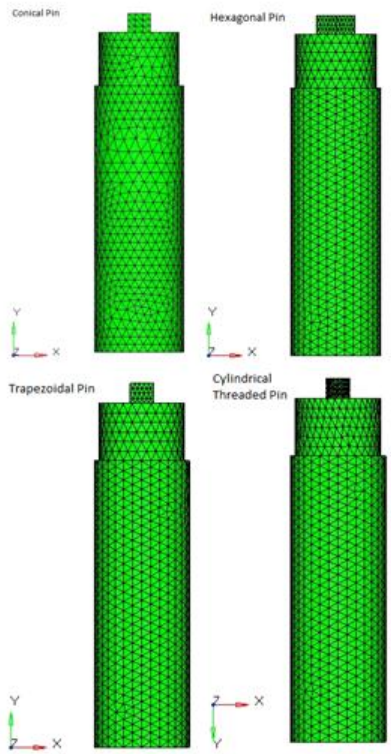

Fig.5. Mesh formation with element size of 2mm for different tool geometry

While making analysis, following figures (Fig-5.1 to 5.8) show the graphical results of peak temperature and flow stresses induced in AA6061alloy using above mentioned four types of tool-pin profiles keeping the rotational speed as 700 rpm constant at 16 KN axial load and welding speed of 4.21 mm/sec.

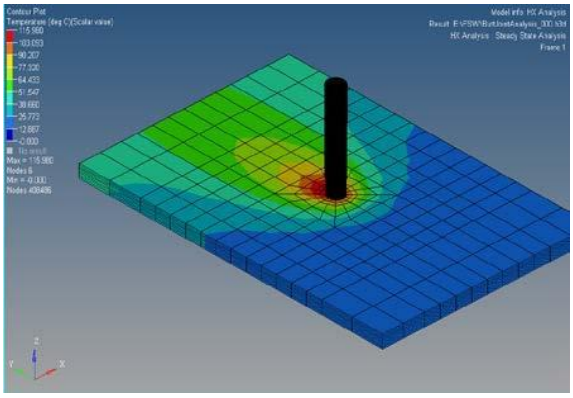

Fig.5.1. Temperature distribution using Conical Pin

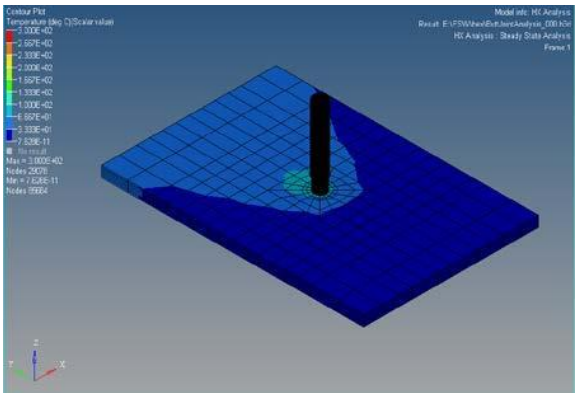

Fig.5.2. Temperature distribution using Hexagonal Pin

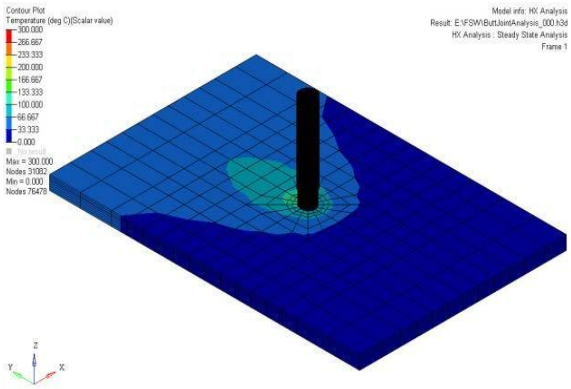

Fig.5.3. Temperature distribution using Trapezoidal Pin

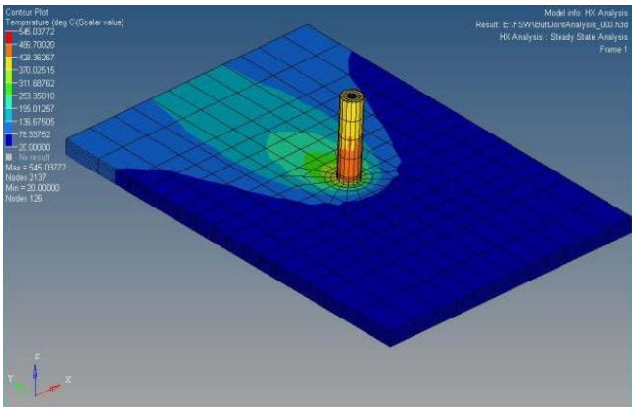

Fig5.4Temperature distribution using Cylindrical threaded Pin

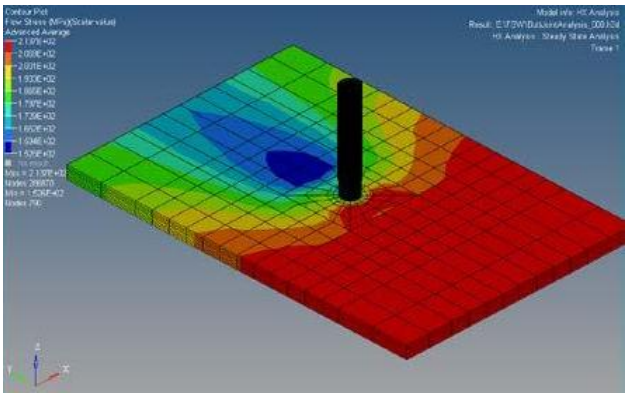

Fig.5.5. Flow stress distribution using Conical Pin

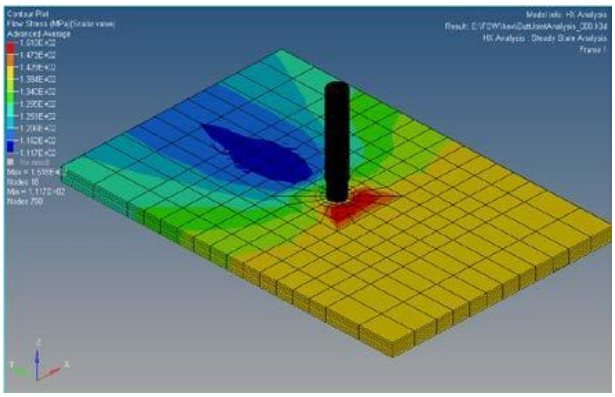

Fig.5.7. Flow stress distribution using Hexagonal Pin

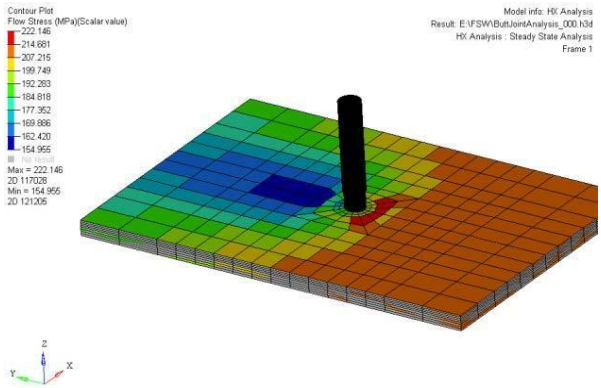

Fig.5.7. Flow stress distribution using Trapezoidal Pin

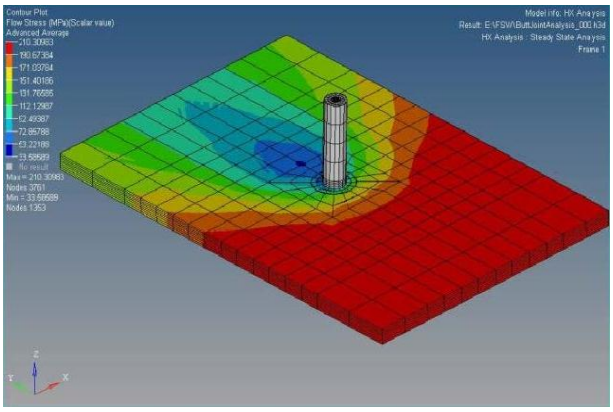

Fig5.8. Flow stress distribution using Cylindrical threaded Pin

Result of simulation in HyperWorks manufacturing solution module for four different tool-pin profiles, peak temperature and flow stresses obtained for AA6061 aluminium alloy are summarized in table -2.

Table-2 Recorded results of simulations for Four Tool-pin profiles.

Pin Profile*	Pressure (MPa)	Peak Temperature (^{0}c)	Flow Stress (MPa)
1	869.2	115.58	213.24
2	615.8	300	151.61
3	861.3	300	222.14
4	421.6	545.03	210.30

*1=Conical pin profile, 2=hexagonal pin profile, 3=Trapezoidal pin profile, 4=Cylindrical threaded pin profile.

VII. CONCLUSIONS

FSW simulations performed on Altair's Hyper Weld have opened new horizon of modeling and simulation of joining processes. As a part of virtual laboratory, this software tool can be used to predict the temperature distribution at different zone after FSW process for different parameters.

The following conclusions can be drawn from simulation for four different tool-pin profiles. The simulation process it found that low peak temperature of 300^{0}c provide minimum flow stress of 151.61Mpa for hexagonal pin profile as compared other. Similarly, the least peak temperature is observed as 115.58^{0}c with still further higher flow stress value of 213.24Mpa. Thus, it can be concluded that hexagonal pin profile provided better flow of material particles with least resistance amongst all pin profiles. This works will helps in optimization of process parameters that can be carried out for the select geometries of tool-pin profile.

REFERENCES

[1] D.Raguraman and L.A.Kumar, "Study of tool geometry on friction stir welding of AA6061 and AZ61", Department of Production Engineering, Sri Sairam Engineering College, Chennai, India, IOSR Journal of Mechanical Engineering (IOSR-JMCE), 2014. PP 63-69.

[2] Santosh N and Mahamad Mudabir, "Thermomechanical modeling and experimental Evaluation of friction stir welds of aluminum AA6061 alloy", Department of Aeronautical Engineering, Niite Meenakshi institute of Technology, Bangalore, India, IJERT, ISSN: 2278-0181, Vol. 2 issue 8, August-2013.

[3] Uday A Dabade, Tajas patil, "Experimental investigation During Frication stir welding of Aluminum Alloy", Department of Mechanical Engineering, Walchand College of Engineering, Sangli, Maharashtra – 416415, India, IMECE, Nov 14-20, 2014.

[4] Jaimin B. Patel, K.D.Bhatt, and Maulik Shah, "Replacement of tool-pin profile and simulation of peak temperature & flow stress during FSW of AA6061 alloy", Department of Mechanical Engineering, VIER, Vadodara, India, IJSET, Vol. 1 issue 5, July 2014.

[5] R. Hariharan and R.J, Goldenren, "A review of friction stir welding of AA6061 Aluminum alloy", world academy science, engineering and technology, ARPN journal of engineering and applied science, Vol:6, No:4, 2011.

[6] Mr.A.G.Chand and J.Bunyan, "Application of Taguchi Technique For Friction Stir Welding of Aluminum Alloy AA6061**",** International Journal of Engineering Research & Technology, Vol. 2, (June - 2013).

[7] D.Muruganadam and T.Kumar, "A review on friction stir welding for aluminum alloys", International Journal of Engineering, Science and Technology, Vol. 2, pp. 276-285, (2012).

[8] Omid A. Zagar, "Friction stir welded joint Aluminum Alloy H20-H20 with Different Type of Tools Mechanical Properties", World Academy of Science, Engineering and Technology, IJM, Aerospace, Industrial, Vol: 8, No: 1, 2014.

[9] H. S. Patil and S. N. Soman, "Experimental study on the effect of welding speed and tool pin profiles on AA6082-O aluminum friction stir welded butt joints", International Journal of Engineering, Science and Technology, Vol. 2, pp. 268-275,(2010).

[10] Indira Rani M and Marpu R.N., "A study of process parameters of Friction stir welded AA6061 Aluminum alloy in O and T6 condtions", ARPN journal of Engineering and Applied sciences, Vol. 6, No. 2, Feb 2011.