# Design and Manufacturing of Automatic Circular $CO_2$ Welding Machine

A. Dhage Kalyani P., B. Chavan Harshal A.

[A,B]*Department of Mechanical Engineering, SPPU, MET's BKC IOE, Nashik, India*

kalyanidhage8620@gmail.com[A], chavanharshal@gmail.com [B]

***Abstract*- Automatic circular $CO_2$ machine tools are designed and manufactured for specific jobs and such never produced in bulk, such machines are finding increasing use in industries the techniques for designing such machine would obviously be quite different from those used for mass produced machine. A very keen judgment is essential for success of such machines. Circular $Co_2$ welding process is a very critical welding which is done on cam shaft with different profile cams, to achieve the dimensional accuracy for different cam shaft welding on same platform special purpose machine is required. Using PLC and SCADA systems we can synchronize the outcome.**

***Index Terms*— SPM, PLC, SCADA, $Co_2$ Welding, Design of Machine.**

## I. INTRODUCTION

Welding is one of the most important methods of joining of two similar and dissimilar metals with or without application of pressure. The Carbon dioxide welding ($CO_2$) process is generally accepted as the preferred joining technique and is mostly chosen for welding large metal structures such as bridges, automobiles, aircraft and ships due to its joint strength, reliability, and low cost compared to other joining processes. In the age of automation machine become an integral part of human being. By the use of automation machine prove itself that it gives high production rate at good quality than manual production rate. In competition market everyone wants to increase their production. The engineer is constantly conformed to the challenges of bringing ideas and design into reality. New machines and techniques are being developed continuously to manufacture various products at cheaper rates and high quality noise, e.g. in buildings, ships, power plants, process plants, etc. Excessive vibrations may lead to fatigue and cause damage to vital parts of installations.

Fluid pulsations may also cause incorrect reading of flow meters and other control devices and the wastage of money and time also.The monitoring of pulsations or vibrations can be valuable to diagnose those problems.

So that there is a scope to investigate the response of a structure due to combined loading of fluid, fluid inertia and structural inertia. Hence in the present study an attempt will be made to investigate the factors influencing flow induced vibration.

## II. LITERATURE REVIEW

Irfan Sheikh et. al [2] studied the MIG welding parameters are the most important factors affecting the quality, productivity and cost of welded joint, Weld bead size, shape and penetration depend on number of parameters. The quality of a welded joint is directly influenced by the welding input parameters.

Mithari Ranjeet et. al [5] describe the welding Positioner with auto indexing which is very important for mass production industries related with circular welding.

Bapat Prasad V. et al [7] studied the Special purpose machine tools are designed and manufactured for specific jobs and such never produced in bulk such machines are finding increasing use in industries the techniques for designing such machine would obviously be quite different from those used for mass produced machine..

Ganguly Arghya et. al [4] describe a PLC based Control System for Hardening and Tempering Furnace in Heat Treatment Plant as implemented at the Siddheshwar unit for Mahindra Automobiles Limited, which is one of India's largest vehicle manufacturing corporation. The proposed system deals with designing of a PLC based control system for Hardening and Tempering Furnace. This paper provides the description of the components implemented for the control system along with the flow of working of various required components. The system is controlled with the help of Messung PLC.

Prof. Sawant P.R et. al [9] discuss the case study and comparison of productivity of component using conventional radial drilling machine and special purpose machine(SPM) for drilling and tapping operation.

Patil Kunal V. et. al [6] describe a novel approach of MIG (Metal Inert Gas) Welding as implemented in a control system based SPM at Gabriel which is the largest manufacturer of shock absorbers in India. The function of the SPM is to weld a knuckle bracket on the circular shaft of the shock absorber. It efficiently helps to fully automate the process of Welding. The paper provides the description of the components implemented in the control system along with the flow of working of various components. The system is controlled by means of a Messung PLC.

## III.DESIGN OF MACHINE

Design of machine is carried out in following steps:

A. Pneumatic circuit design
B. Electric circuit design
C. Mechanical design of components

### A. Pneumatic Circuit Design

Pneumatic systems are power systems using compressed air as a working medium for the power transmission. Their principle of operation is similar to that of the hydraulic power systems. An air compressor converts the mechanical energy of the prime mover into, mainly, pressure energy of the compressed air.

There are basically three important considerations in Designing hydraulic or pneumatic circuits

1. Safety- The system should be designed in such a way that it will take care of safety of both man and machine
2. Efficient performance- The system should work efficiently and perform specific task as designed and intended.
3. Cost- The system should e affordable for the particular applications. Pneumatic systems are usually used for the low cost automations.

Components of Pneumatic circuit:

1) Pneumatic Cylinder:
   Specification: MD D1 B40-2002
   Pressure: 5 bar
2) Switch: D-M9PL-LUG
3) Solenoid Valve with coil:
   SPECIFICAION: SY7220-5LZ-02
   Operating pressure range: 0.5 MPa
   Load Factor: 50%
   Cylinder Stroke: 1000 mm
4) Filter Regulator:
   Specification: AW 30-03 BG 1
   Port Size: 3/8
   Pressure: 0.02 to 0.2 MPA
   Pressure gauge: Round type (with limit indicator)

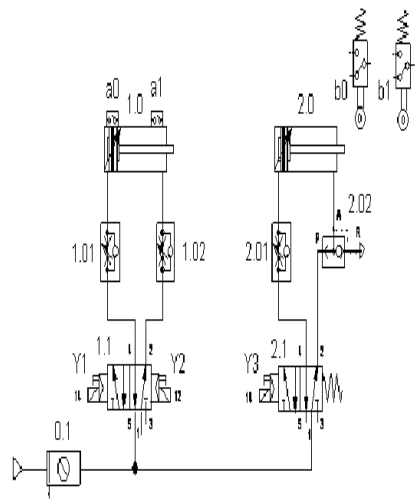


Fig 1: Pneumatic circuit

Table I
Description of components

| Sr.No. | Description | Qty |
|---|---|---|
| 1.0 & 2.0 | Compact cylinder | 2nos. |
| A0 & a1 | Proximity Sensor | 2nos. |
| 1.01 & 2.01 | One-way flow control valve | 4nos. |
| 1.1 & 2.1 | Solenoid valve | 2nos. |
| Y1 & Y3 | Solenoid coil | 2nos. |
| 0.1 | Service unit | 1nos. |

Working:

1. Fig. 1 shows a simplified industrial system.In thisvariable flow control valves (speed controller) are fitted in both the inlet and return lines which is then connected to the double acting cylinders.

2. In this 4/2 Solenoid DC valve is used. Consider the position 1 i.e left hand side position air enters into the piston end side of the double acting cylinder and moves the piston forward which operates welding gun, at the same the air which is present at the rod end side of the cylinder is return from the return line.Since the air flows through the flow control valve, the rate of flow of air can be controlled which in turn will control the speed of the piston.

3.Now, Consider the position 2 i.e. right hand sideposition air enters into the rod end side of the double acting cylinder and moves the piston backward and hence operating welding gun, at the same the air which is present at the piston end side of the cylinder is return from the return line.

4. DCV is an electromechanically operated valve. The valve is controlled by an electric current which helps to change the position.

5.Air from the both end of the cylinder will be discharged directly through the check valve in the return line and it is metered. Thus, it could be seen that the speed of the actuator (double acting cylinder) could be controlled in both directions.

B. Electric circuit Design

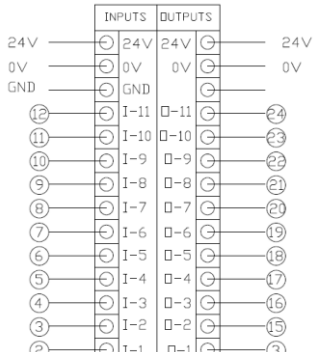


Fig. 2: Wiring for PLC

PLC is used in SPM for making machine automatic. It is a digital computer used for automation of typically industrial electromechanical processes, such as control of machinery on factory assembly lines, light fixtures PLCs are designed for multiple analogue and digital inputs and output arrangements, extended temperature ranges, immunity to electrical noise, and resistance to vibration and impact.. The function of the PLC is too evolved over the years to include sequential relay control, motion control, process control, distributed control systems and networking.

C. Mechanical design of components

Modeling of some of the important parts are given below along with assembly of machine. CATIA V5.2 is used for modeling.

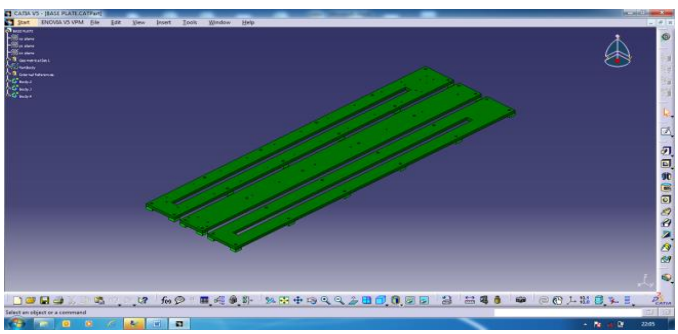

Fig. 3: Base Plate

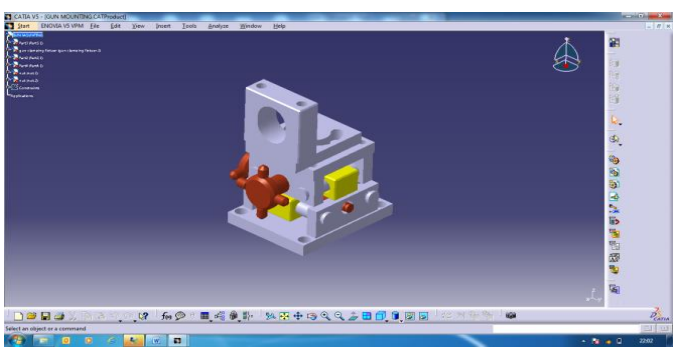

Fig. 4: Gun Mounting

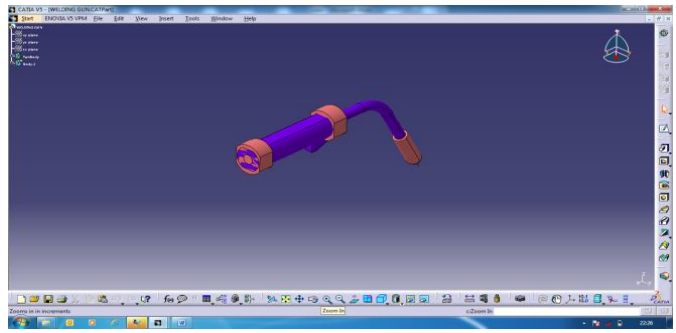

Fig. 5: Welding Gun

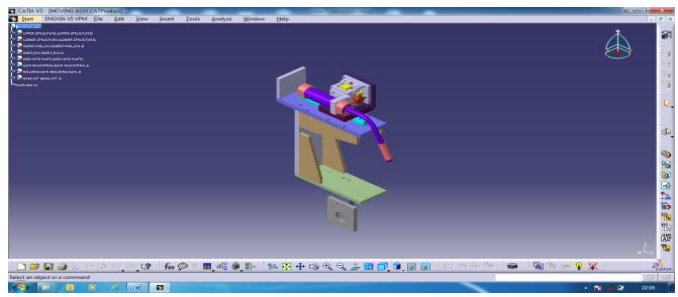

Fig. 6: Moving ASSY

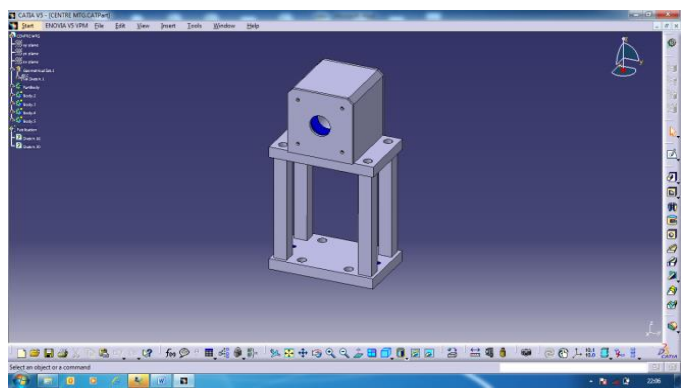

Fig. 7: Center MTG

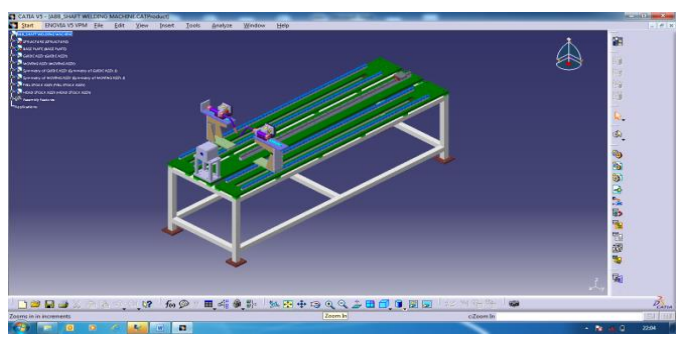

Fig. 8: Assembly of SPM

## IV. WORKING OF MACHINE

In this machine, two welding guns are mounted on work table to weld cams on shaft as shown in fig. 8. To move welding gun in Y- direction stepper motor is used and to move in X-direction cylinders are used.DC motor of 120 V with gear box 200 rpm is used to rotate the shaft in 360 degree.Stepper motor of torque 35 kg cm, 2000 rpm with drive to reduce the speed of motor.In this SPM welding process of cams on shaft weld automatically with the help of PLC. Electric circuit diagram of PLC is shown in fig. 2. Shaft is mounted on center mounting which is fixed at one end with the help of stepper motor shaft is rotate in 360 degree at that time with the help of PLC welding gun weld the cams on that shaft. Because of automated machine time required to done the job is less and production increased.

Fig. 8: Cam welding

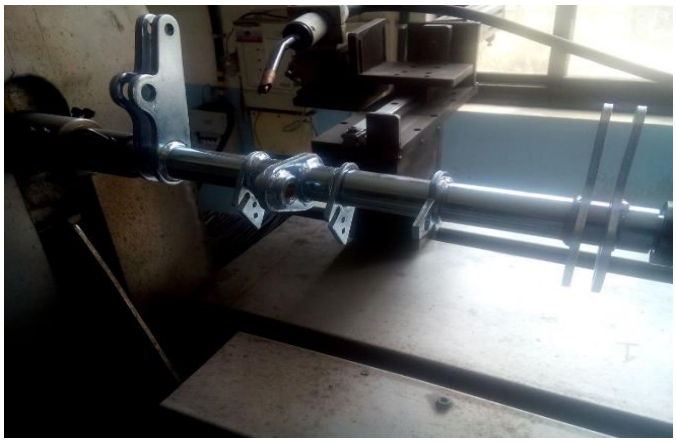

Fig. 9: Welding Gun

Table II
Welding Material

| Item | Brand Size |
|---|---|
| Welding consumables | L electrode NITTETSU YM-55H (0.8 mm)<br>T electrode NITTETSU SF-1 (0.8 mm) |
| Cut wire | NITTETSU YK-CM (0.8 mm) |
| Shield gas | CO2 (for both L and T wires: 25-30 l/min) |

Table III
Machine Parameters

| **Parameters** | **Manual Welding Machine** | **SPM** |
|---|---|---|
| Target 1200jobs/months | Cannot achieved | Can be achieved |
| Cyclic Time/Job | 24 min | 14 min |
| Jobs/Day | 20 (8 hrs) | 35 (8 hrs) |

## V. CONCLUSION

The manual $Co_2$ welding process has lot many limitations and disadvantages like less productivity, inconsistence quality of welding and dimensional inaccuracy, and dependency on operators to large extent. All these disadvantages are overcome by automatic circular $Co_2$ welding SPM. Industries are acquainted by automation and $Co_2$ welding SPM will find many applications in several industries in coming decades.

## REFERENCES


[1] Vignesh T.,Kirubakaran J., “Automation based power transmission control Station using PLC and SCADA”, International Journal of Innovative Science, Engineering & Technology, 2015, vol. 2.

[2] Sheikh Irfan and Prof. Achwal Vishal “An Experimental Study on the Effect of MIG Welding Parameters on the Weldability of Galvenize Steel”, International Journal on Emerging Technologies, 2014,pp. 146-152,

[3] Narayan Lalit K., Ramakrishna Ch., Sarcar M.M.M., Mallikarjuna Rao K. “Optimization of $CO_2$ Welding Process Parameters for Weld Bead Penetration of SS41 Mild Steel Using Response Surface Methodolog”, Sir CRR College of Engineering, Eluru, AP, India 3GIET, Orrisa, India 4JNTU, Kakinada, AP, India nov 2013 - april 2014.

[4] Ganguly Arghya, Kumbhare Naveenkumar, Shinde Pooja, Joshi Jayashri P., “Plc based control system for hardening and tempering furnace in heat treatment plant”, International journal of advanced research in electrical, electronics and instrumentation engineering, 2014, vol. 3.

[5] Mithari Ranjeet, “Design of Multi-Axis Welding Positioner with Auto Indexing”, International Journal of Innovations in Engineering and Technology (IJIET), 2014, vol. 3.
[6] Patil Kunal V., Gadade Balaji K., Raut Parag G., Gaikwad Suvarna K., Toke Ganesh, “A Novel approach of MIG Welding using PLC”,International Journal of Advanced Research in Electrical, 2014, vol. 3.
[7] Bapat Prasad V., “Design of Special Purpose Machine Head to Improve the Production of Engine Block”, International Journal of Emerging Science and Engineering (IJESE), 2014, vol. 2.
[8] Boiko Irina, Avisans Didzis, “study of shielding gases for mag welding”, Riga Technical University, Institute of Mechanical Engineering, Ezermalas 6k, LV-1006, Riga, Latvia, 2013.

**Dhage Kalyani Prabhakar**has completed Bachelor’s Degree from NDMVP’s KBT COE,Nasik. Now pursuingME Degree in Mechanical Engineering from MET’s Institute of Engineering, BKC, Nashik.

**Prof. H. A. Chavan** is working in MET’s Institute of Engineering BKC Nashik. He has published/ presented research papers in National& International JournalsConferences. His area of interest is CAD/CAM.