International Engineering Research Journal Page No 1727-1732

Experimental and Numerical Analysis of Woven Carbon/Epoxy Composite Plate

Dhanashri K. Dhumal and Suhas P. Deshmukh

[1]PG Student - Mechanical (Design Engineering) Department. Savitribai Phule Pune University, Pune.

[2]Professor- Mechanical Engineering Department. Savitribai Phule Pune University, Pune.

Sinhgad Academy of Engineering, Kondhwa (BK)

***Abstract*— Composite materials are on high demand in recent days amongst high performance products that need to be strong enough in severe loading conditions. It can be developed with a suitable combination of matrix and reinforcement materials to meet the requirement of specific applications. The present work attempts to form composite plates using a combination of polymers and fibers to improve certain properties. This paper describes the mechanical properties of (0°/90°) CFRP plates subjected to tensile, bending and impact loading. The results are compared and validated with the numerical analysis.**

The typical application of this configuration of composite plate is the opening or Man hole provided at the petrol pump.

***Index Terms*— Carbon Fibers, Composites, Epoxy resin, Reinforcement, UTM (Universal Testing Machine).**

I. Introduction

A Composite is a structural material that consists of two or more combined constituents that are combined at a macroscopic level and are not soluble in each other. One constituent is called the reinforcing phase and the one in which it is embedded is called the matrix. The reinforcing phase material may be in the form of fibers, particles, or flakes. The matrix phase materials are generally continuous. The duty of reinforcements is attaining strength of the composite and the matrix has the responsibility of bonding of the reinforcements.

The composite materials, however, generally possess combination of properties such as stiffness, strength, weight, high temperature performance, corrosion resistance, hardness and conductivity which are not possible with the individual components. Composite materials are not homogeneous. Their properties are dependent on many factors, the most important of which are the type of fiber, quantity of fiber (as volume fraction) and the configuration of the reinforcement. They are generally completely elastic up to failure and exhibit neither a yield point nor a region of plasticity. If all the fibers are aligned in one direction then the composite relatively stiff and strong in that direction, but in the transverse direction it has low modulus and low strength. When a unidirectional composite is tested at a small angle from the fiber axis, there is a considerable reduction in strength.

Date of submission of paper for review is 10th May 2016. I am greatly indebted to my guide Dr. S. P. DESHMUKH. With special thanks, I express my profound gratitude for his whole inspiration and valuable guidance in doing project in this year.

Corresponding author at: Department of Mechanical Engineering, Sinhgad Academy of Engg., Kondhwa (BK), Pune.

E-mail address: dhanashree.dhumal@gmail.com, Tel: +91 9158488456, +91 7387763210.

II. Literature Review

B. Sidda Reddy, [1] worked on Bending analysis of laminated composite plates using finite element method. In this paper, a number of finite element analyses have been carried out for various side-to-thickness ratios, aspect ratios and modulus ratios to study the effect of transverse shear deformation on deflection and stresses of laminated composite plates subjected to uniformly distributed load.

Abhishek Jha, [2] the first ply failure analysis is widely accepted method to predict strength of laminated composite structures and also considered as its design criterion.

Junaid Kameran Ahmed, [3] presented a static and dynamic analysis of Graphite/Epoxy composite plates. In this work the behavior of laminated composite plates under transverse loading using an eight-node diso-parametric quadratic element based on First Order Shear Deformation Theory was studied.

Campos Marcelo C., [4] did Comparative study of mechanical properties of Woven of carbon fiber twill and plain weave in Laminates with epoxy matrix. The focus of this work is to investigate the influence of carbon-fiber fabric, denim fabric and carbon fiber plain weave with relation to the mechanical performance of tensile test and flexion, composing rolled with 4 (four) layers, having as a polymeric matrix to epoxy resin SQ 2004 (ether a series bisphenol A) for both woven. Results indicate that at the request of tensile test, the fabric of the carbon fiber plain weave has better results, in addition to a deformation greater when compared to the fabric laminated carbon fiber twill.

B.V.Babu Kiran, [5] studied the Effect of Resin and Thickness on Tensile Properties of Laminated Composites. This investigation was undertaken to determine the influence of Resin & Thickness of Laminates on glass fiber Epoxy, graphite fiber Epoxy and Carbon fiber Epoxy laminates with glass fiber Polyester, graphite fiber polyester and carbon fiber polyester resin under Tensile loads.

Patil Deogonda, [6] evaluated Mechanical Property of Glass Fiber Reinforcement Epoxy Composites. This work describes the development and mechanical characterization of new polymer composites consisting of glass fibre reinforcement, epoxy resin and filler materials such as TiO2 and ZnS. The newly developed composites are characterized for their mechanical properties. Experiments like tensile test, three point bending and impact test were conducted to find the significant influence of filler material on mechanical characteristics of GFRP composites. The tests result have shown that higher the filler material volume percentage greater the strength for both TiO2 and ZnS filled glass epoxy composites, ZnS filled composite show more sustaining values than TiO2.

Prashanth Banakar, [7] studied Influence of Fiber Orientation and Thickness on Tensile Properties of Laminated Polymer Composites. The objective of this research was to gain a better understanding of tensile properties of epoxy resin composites reinforced with glass fiber. The effect of fiber orientation & thickness of laminates has been investigated & experimentation was performed to determine property data for material specifications, the laminates were obtained by hand layup process. This research indicates that tensile strength is mainly dependent on the fiber orientation & thickness of laminated polymer composites.

Alnefaie et al., developed a 3D-FE model of delaminated fiber reinforced composite plates to analyze their dynamics. Natural frequencies and modal displacements are calculated for various case studies for different dimensions and delamination characteristics. Numerical results showed a good agreement with available experimental data. A new proposed model shows enhancement of the accuracy of the results.

Paiva et al, studied and compared the Tensile Strength of Different Carbon Fabric Reinforced Epoxy Composites. For this work, it was manufactured four different laminate families (F155/PW, F155/HS, F584/PW and F584/HS) using pre-impregnated materials (prepregs) based on F155TM and F584TM epoxy resins reinforced with carbon fiber fabric styles Plain Weave (PW) and Eight Harness Satin (8HS).

III. Preparation of Laminated Composite Plate

The Carbon/Epoxy composite plate is fabricated using simple hand layup technique as shown in Figure.1. The mould

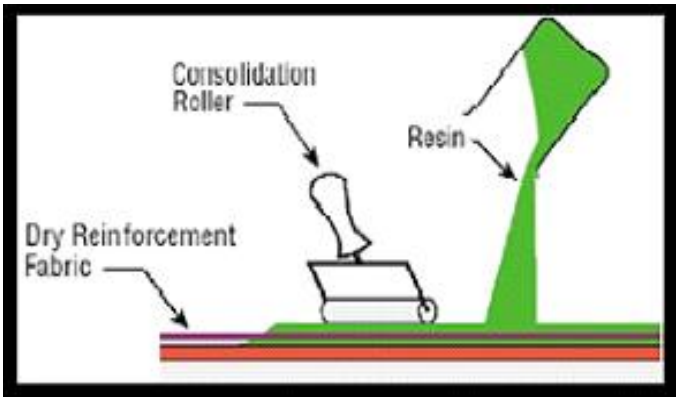

Figure 1: Schematic of Hand Lay-up technique

Figure 2: Woven Carbon Fabric and Araldite HY 951 hardener and Epoxy Resin

surface is covered with a releasing agent. The procedure consists of placing the Carbon fibres, layer by layer and applying liquid epoxy mixed with hardener on the Carbon fibres in order to form a solid network cross-linked polymer.

The layup assembly is pressed with the help of roller so that excess air between the layers is expelled out.

The laminate is cured at ambient conditions for a period of about 24hrs. Sample specimens are cut down from the 300×300 mm dimension and 3mm thick plate for three different tests i.e. tensile test, Flexure test and Impact test.

The type of reinforcement fiber selected to make specimens is, Carbon fiber 3k of 200 gsm density. The matrix material used is a medium viscosity Epoxy resin having excellent adhesion strength and a room temperature curing Araldite HY 951 hardener.

The matrix material that is, Epoxy resin and Hardener are mixed with proportion of 250gm resin and 30 ml hardener. This matrix was chosen since it provided good resistance to alkalis and has good adhesive properties.

Specimen of 125mm×25mm×2.5mm dimension is used for the tensile test. The ASTM standard used for tensile test is D 638.

The specimen of dimensions 64mm×13.5mm×2.5mm is used for the Izod Impact test with the v- notch at the middle of the specimen of ASTM D790. Specimen size is same as the

tensile test specimen is used for the Flexure test or bending test of ASTM D 256.

IV. Experimental Work

Experiments are conducted on each of the sample on Computerized Universal testing machine, 3-point bending testing machine and the Izod Impact testing machine.

1. Tension test:

Tensile test of the carbon fiber specimen is carried out on Computerized Universal Testing Machine. The tensile properties of the carbon fiber reinforced polymer composites were determined according to ASTM D638 test standard specifications.

Test procedure:

Specimens are placed in the grips of a Universal Test Machine at a specified grip separation and pulled until failure. For ASTM D638 the test speed can be determined by the material specification or time to failure (1 to 10 minutes). A typical test speed for standard test specimens is 10 mm/min and the gauge length is 62.5mm. An extensometer or strain gauge is used to determine elongation and tensile modulus. Test results such as load and displacement were automatically logged into a raw data file via a data acquisition system. The data collection will be stopped when total failure occurs. From this data, young's modulus value has been calculated and load-displacement curves were produced.

Figure 4 shows the load vs deformation graph and figure 5 shows the stress-strain graph obtained from the Tensile testing. The graph shows that the material is elastic upto the failure.

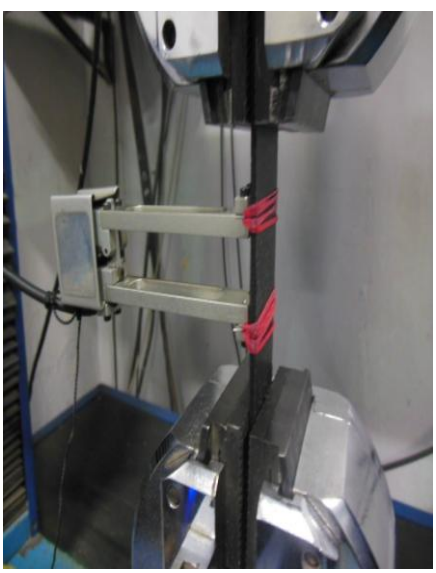

Figure 3: Computerized Universal Testing Machine

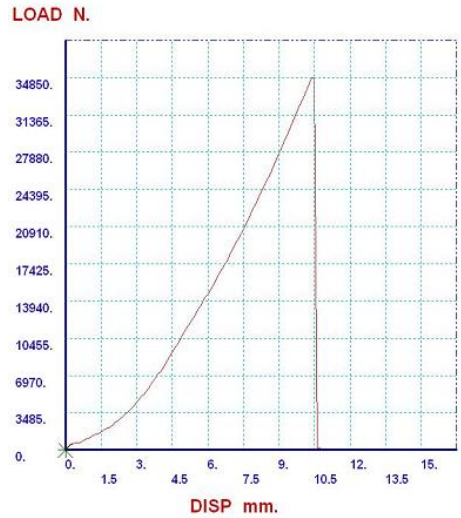

Figure 4: Load Vs. Displacement diagram from tensile test

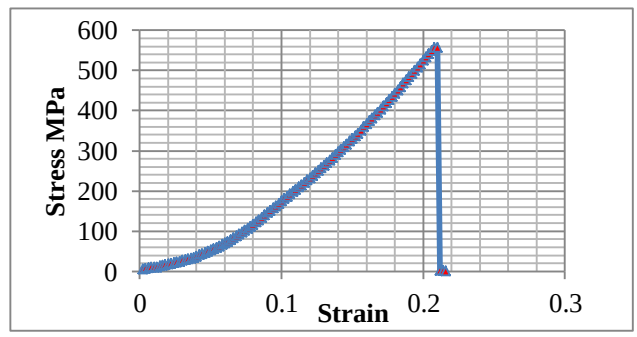

Figure 5: stress vs. strain diagram from test

The breaking load for carbon fiber is 34850 N. The tensile strength of Carbon/Epoxy can be calculated from the breaking load and the cross-sectional area is 557.580 MPa.

2. Bending test:

Bending test of the carbon fiber specimen is carried on 3-point bending test machine. The bending properties of the carbon fiber reinforced polymer composites were determined according to ASTM D790 test standard specifications.

Figure 6: 3-point Bending Test

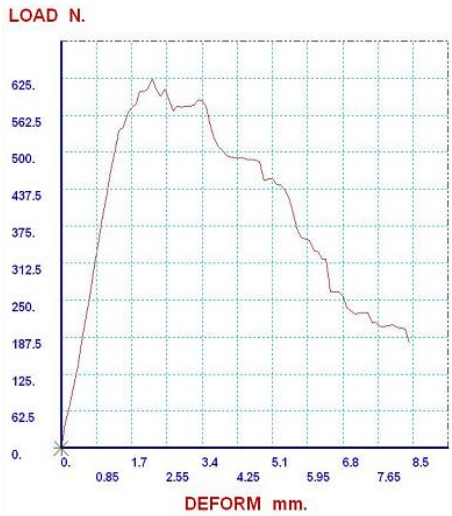

Figure 7: Load Vs. Deformation diagram from Bending test

The specimen is kept on supports and the point load is applied at the center of the specimen as shown in figure 6. The bending strength is recorded and the specimen fails at the midpoint of specimen.

Figure 7 shows that as load increases the deformation in the specimen also increasing linearly, a point comes when the deformation start decreasing is a point where ply failure occurs.

The load cell is of magnitude 9800 N. The maximum flex strength of carbon fiber is 299.17 MPa. The peak load for bending is 623.28 N.

3. Izod Impact test:

The test specimen is hold in the jaw of Izod impact testing machine as shown in figure 8. The swinging hammer is released from the top. The hammer strikes the specimen on the side of v-notch. Specimen breaks in two pieces at its notch section. It gives the impact energy or strength of the carbon fiber. The magnitude of the Impact energy is 673.33 J/m.

Figure 8: Izod Impact Test machine

V. Numerical Analysis

Numerical analysis of carbon fiber is carried out on ANSYS 14.0. This Numerical analysis gives the results in terms of Equivalent Stresses and the Total Deformation. The loads and boundary conditions are applied to the specimen same as the experimental conditions and the results are obtained.

1. Tensile test:

The boundary conditions of tension test and loads are given as the left side end of plate fixed and the tensile load is acting on the right end of specimen.

Figure 9 shows the total deformation in the tensile specimen. The total deformation value using ANSYS 14.0 comes about 0.32 mm.

The Equivalent stresses developed in tensile specimen are shown in figure 10. The maximum stress developed is 525.75 MPa.

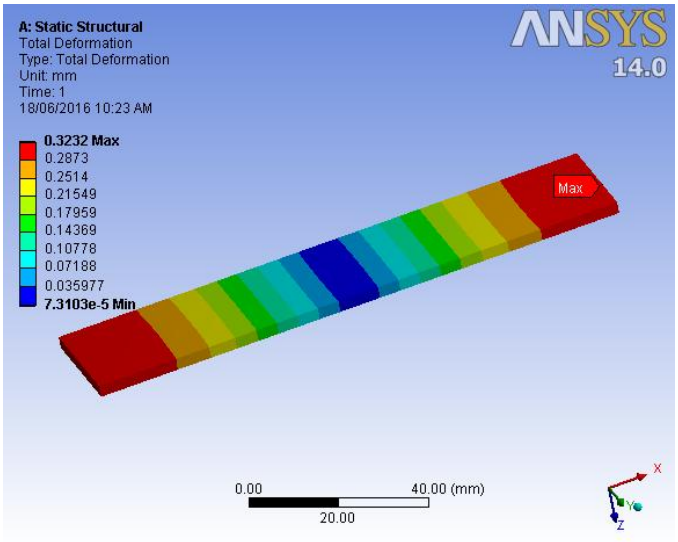

Figure 9: total deformation in tension test

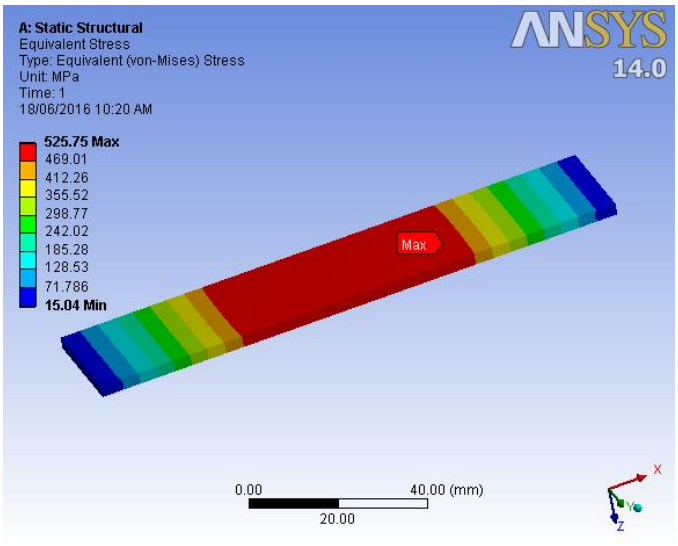

Figure 10: Equivalent stresses in tension test

2. Bending test:

The boundary conditions and loads are applied to the designed model of bending test. The load is applied on the upper part and the plate is assumed to be simply supported on the two supports. Supports are fixed and the loaded part is moving towards plate.

Figure 11 shows the total deformation in the flexural or bending test specimen. The total deformation value using ANSYS 14.0 comes about 1.717 mm.
The Equivalent stresses developed in tensile specimen are shown in figure 12. The maximum stress developed is 275.58 MPa.

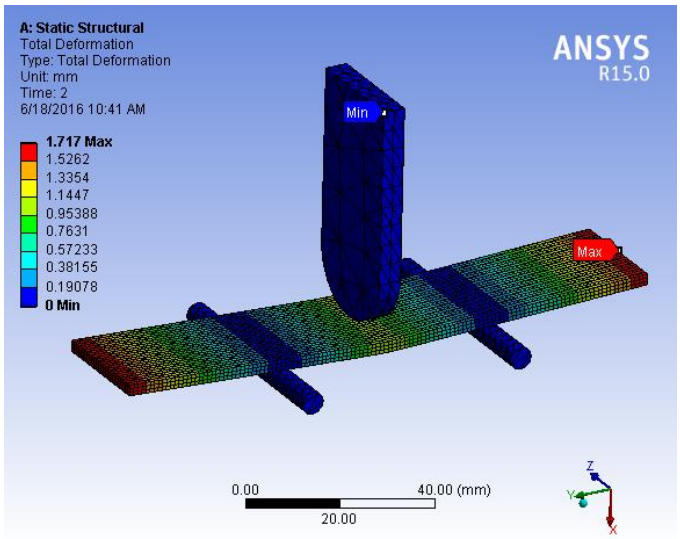

Figure 11: Total Deformation in Flexural test

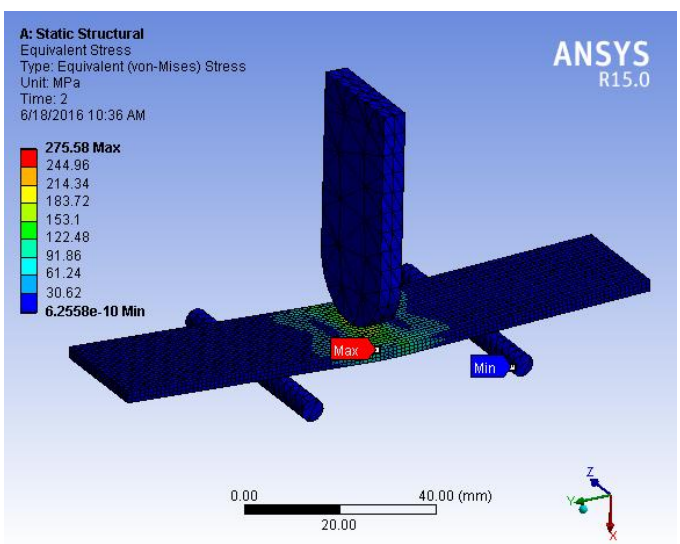

Figure 12: Equivalent stresses in Flexural test

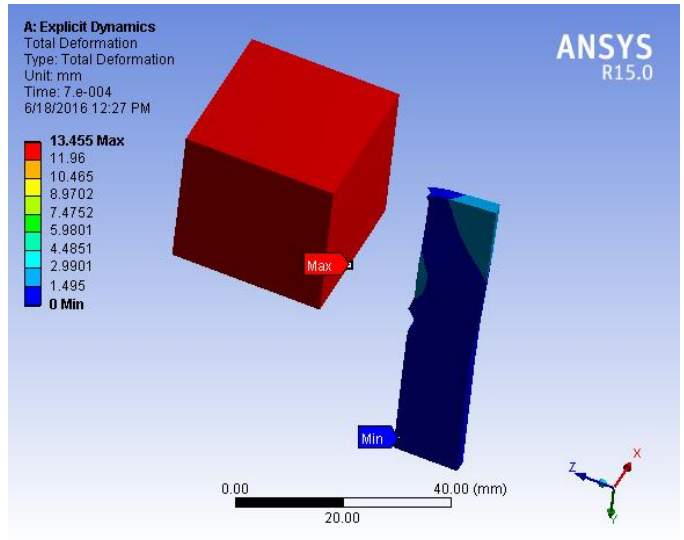

Figure 13: Total Deformation in Izod Impact test

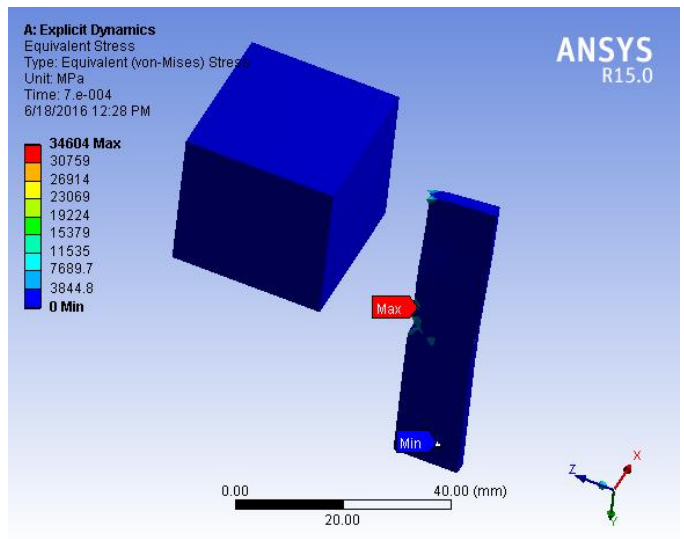

Figure 14: Equivalent stresses in Izod Impact test

3. Impact Test:

In Izod Impact test the hammer strikes on the specimen, the boundary conditions are given as displacement to the hammer part and the specimen is fixed at its lower part. When hammer strikes it gives displacement.

Figure 13 and figure 14 shows the total deformation and the Equivalent stresses developed in the impact test model respectively.
The total deformation in the specimen is 13.455 mm and Equivalent stresses are 34604 MPa.

VI. RESULT AND DISCUSSION

The three tests are performed on the Carbon/Epoxy laminated composite specimen. The results from the test are giving the brief idea about the tensile modulus, tensile strength, impact

strength and the flexural strength of the carbon fiber composite plate. Following values are obtained from the tests:

Table 1: Results and Discussion

Sr. No.	Test	Unit	Experimental Results	Numerical Results
Bending test				
1	Tensile strength	MPa	557.580	525.75
Flexural Test				
3	Flexural strength	MPa	299.17	275.58
Bending Test				
4	Izod impact energy	J/m	673.33	----

The results from the Experimental and Numerical Analysis are near about same. From table one can conclude that the tensile strength and flexural strength value obtained from both experimental and Numerical analysis are acceptable.

The tensile modulus is obtained from the true stress and true strain values and it is 60655.46 MPa.

The mechanical behavior of carbon fiber reinforced polymer composites was studied.

ACKNOWLEGDEMENT

I would like to thank my guide Dr. S. P. Deshmukh for valuable guidance and contribution in developing this innovative concept.

REFERENCES

1. B. Sidda Reddy, A. Ramanjaneya Reddy, J. Suresh Kumar, and K. Vijaya Kumar Reddy, “Bending analysis of laminated composite plates using finite element method”, 2012.
2. Abhishek Jha, “First Ply Failure Analysis of Laminated Composite Plates on ANSYS Mechanical APDL”, International Journal of Engineering and Technical Research (IJETR), July 2015.
3. Junaid Kameran Ahmed, V.C. Agarwal, P.Pal, Vikas Srivastav, “Static and Dynamic Analysis of Composite Laminated Plate”, International Journal of Innovative Technology and Exploring Engineering (IJITEE), November 2013.
4. Campos, Marcelo C., Comparative Study of Mechanical Properties of Woven Carbon Fiber Twill And Plain Weave in Laminates with Epoxy Matrix, 2nd Brazilian Conference On Composite Materials (Bccm2), September 15-18, 2014.
5. B.V.Babu Kiran, “Effect of Resin and Thickness on Tensile Properties of Laminated Composites”, American International Journal of Research in Science, Technology, Engineering & Mathematics (AIJRSTEM), December 2013-Februery 2014, pp. 128-134.
6. Patil Deogonda, Chalwa Vijaykumar N, Mechanical Property of Glass Fiber Reinforcement Epoxy Composites, International Journal of Scientific Engineering and Research (IJSER), Volume 1, Issue 4, December 2013, pp. 6-9.
7. Banakar Prashanth, Influence of Fiber Orientation and Thickness on Tensile Properties of Laminated Polymer Composites, International Journal of Pure and Applied Sciences and Technology, 2012, pp. 61-68.
8. G.Maruthi Prasad Yadav, “Fabrication and Experimental Analysis of E-Glass Epoxy Laminates”, International Journal of Mechanical and Industrial Technology, April 2015 - September 2015, pp: (22-26).
9. R Kalidass, S Balaji, Tensile Test for Environmental Effect On Glass Fiber Composite Materials, The International Journal Of Engineering And Science (IJES), Volume 3, Issue 1, 2014, pp. 23-27.