Analysis of Natural Frequencies and Mode Shapes of Metal Expansion Bellows for STHE

[1]Mr.Vishnu Rajan, [2]Dr.L.G. Navale

Abstract— **Metal expansion bellow is an important flexible member that can absorb vibrations to protect the piping system. It can also be a mechanical device for absorbing energy or displacement in structures. Bellows have a wide range of applications in the field of piping system, industrial actuators, as an implantable drug pumps in medical applications and aerospace applications. The main objective of this paper is to find out the axial natural frequencies, modal frequencies and mode shapes of U-shaped bellows. In this paper an analytical and numerical study is carried out to find the first ten axial natural frequencies of the bellows. Numerical analysis is performed as per the mathematical model by using MATLAB and modal analysis is performed by using ANSYS 15. All analysis is carried out with different end conditions.**

Key Words: - Metal expansion bellow, Natural frequency, U-shaped bellows, Modal analysis, Numerical analysis.

I. INTRODUCTION

Shell and tube heat exchangers are most commonly used in the process industries due to a large ratio of heat transfer area to volume and weight. The tube is the basic component of shell and tube heat exchanger (STHE) which permits heat transfer between fluid flowing inside and outside. This tube is enclosed with a cover of metal sheet known as shell. Normally STHE are operational with a wide temperature difference, internal pressure, vibrations and aggressive corrosion environment. Due to the extreme working conditions the shell is always stressed under axial pressure, thermal load and vibrations. This may lead to contraction and expansion of shell. If the rate of contraction and expansion increases, then there may be a chance of shell failure. In order to compensate the deformation, an expansion joint is used in STHE. Figure 1 shows a metal expansion bellow with two end flanges, which connects two pipes under different operating conditions. Generally metal bellows are structural component in which wavy bellows shape is formed on the surface of a circular tube to introduce the elastic property and used as an expansion joint in STHE. Metal bellows are essential component of air conditioning equipment, industrial plants, hose pipes, vacuum systems, aerospace equipment, MEMS etc.

Bellows used absorbs regular and irregular expansion as well as contraction of the system. Bellow must possess high strength and good flexibility that can be achieved by selection of proper material, design and manufacturing methods. Bellows must be strong enough circumferentially to resist the pressure and flexible enough longitudinally to accept the deflections for which it is designed. It is broadly used to deal with combined effect of vibrations, thermal expansion, angular, radial, and axial displacements of the system.

Figure 1 Metal expansion bellow

The metal bellows are manufactured by forming, bulging and drawing process and stainless steel is used commonly used whereas for special application Inconel and aluminum are used. The bellows are having wide variety of shapes like U-shaped, semi-toroidal, toroidal, S-shaped, flat, stepped, single sweep, and nested ripple. For its proper design detailed investigation of vibration effect, joints of bellows, thermal stresses, flow analysis, fatigue life, selection of materials and shapes are necessary. Bellows are designed as per the Standards of Expansion Joint Manufactures Association, EJMA [2]. H.Shaikh et al. [3] had conducted an experimental work to investigate failure of an AM350 steel bellows, these bellows were used in the controlled rod drive mechanism of the fast breeder test reactor. G.I.Broman et al. [4]

"This work was proposed for the dissertation for post graduation in Mechanical Engineering (Design) under Savitribai Phule Pune University".

Vishnu Rajan is a PG student pursuing at D.Y.P.I.ET under Savitribai Phule Pune University (email: vishnurajanpillai@gmail.com)

L.G.Navale is Professor in Mechanical Engineering, D.Y.P.I.ET under Savitribai Phule Pune University (email: lgnavale2006@yahoo.co.in).

recommended I-DEAS software for the simulation of the metal expansion bellows. He suggested that the method will work in any software in which some of the parameters can be set by the user. This is particularly helpful when the bellows is only a part of a system to be optimized with respect to overall design parameters. Li [5] had found the effect of the stresses of elliptic degree of Ω-shaped bellows with ideal and elliptic toroids under internal pressure or deflection, and he evaluated the stress distribution state. The designed stress result of Ω-shaped bellows shows that the elliptic degree of Ω-shaped toroid affects the magnitude of the induced stress and axial deflection-induced stress. C.Becht IV [6] has shown that the dissimilarity between the bellow and polished bar fatigue, as well as the difference between unreinforced and reinforced bellow. G.H.Faraji et al. [7] proposed a new method for manufacturing of the metal bellows and compared experimental results with finite element analysis (LS-Dyna). G.Wang et al. [8] developed a new technology, super-plastic forming (SPF) method of applying gas pressure and compressive axial load for manufacturing of bellows and recommended its use to manufacture large diameter U-shaped expansion joints made of titanium alloys. Qu Cai-hong et al. [20] had proposed a fatigue analysis for metal bellows based on orientation and displacement and found that, this fatigue analysis is reliable. Sungchul Kim et al. [21] had developed a design software using MATLAB. They develop the bellows software known as Bellows Designer, using EJMA regulations 9th Edition. This software uses the MATLAB GUI to make access to the program code easy, to enhance security, and to reduce the possibility of program errors. Jin-Bong et al. [22] had studied the effects of convolution geometry and boundary conditions on the failure of bellows.

II. ORIGIN OF RESEARCH PROBLEM

The failure of bellows under extreme operating condtions creates problems for maintaining reliable and safe operations during industrial applications. Such operating conditions in various applications like boiler, chemical plants, piping systems, petrochemical plants, refineries, power stations, aerospace, etc. requires highly reliable performance to prevent catastrophic failure. In addition the bellows are subjected to both mechanical stress and corrosive environment. Understanding the root cause of the failure can provide the useful information related to stress corrosion crack, corrosion and erosion, instability of deformation under cyclic loading, excessive bellows deflection, flow induced vibrations and fatigue failure. Hence optimized shapes of the bellows are anticipated to give good guidelines to the practical designs.

III. MOTIVATION & PROBLEM FORMULATION

As per the detailed literature survey, review and the opinions of the experts in this field, it is very difficult to formulate the perfect reliable design of metal expansion bellows. Because of the complex geometry it is very difficult to analyse the behaviour of the bellow. The design of bellow is basically referred from Expansion Joint Manufacturing Association [EJMA] and ASME Appendix but the selection of material, manufacturing and testing are still challenging. EJMA defines the fatigue life analysis in terms of meridional stresses but other stresses like pressure bending; circumferential could also cause significantly the fatigue failure of bellows. Also primary motivation of this research is to predict the flow excited resonant frequencies of the bellows under axial vibrations and to study its effect on stresses. Evaluation of stresses has no significance without rational stress limit and accounting treatment of pressure bending stresses and treatment of secondary stresses at elevated temperature.

It is proposed to find the axial natural frequencies of metal expansion bellow under different end conditions like

1. One end fixed and other free
2. Both end fixed
3. One end fixed and other attached to a weight.

IV. TERMINOLOGY OF BELLOWS

For designing a bellow, designer has to know some of the terminologies regarding the bellow. As per the EJMA standard the following terms has to be considered while to design a bellow.

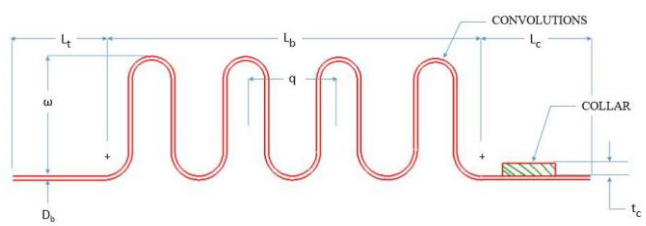

Figure 2 Terminology of bellow

- q = Convolution pitch
- w = Convolution height
- Db= ID of cylindrical tangent and bellows convolutions
- nt= No. of bellows of ply thickness t
- tc=Bellows tangent reinforcing collar material thickness
- Lb= convoluted length
- Lc= tangent collar length
- Lt= length

1. Convolution pitch: The distance between the convolutions measured from crest to crest.

2. Cycle: One complete cycle based upon moving the bellows from neutral length to position 1, back through the neutral length to position 2 and then back to the neutral length.
3. Design temperature: The maximum and design operating and installation temperatures should be accurately stated. In situations where the ambient temperature is expected to vary significantly during pipe line construction, special care in expansion joint positioning may be necessary.

4. Design pressure: The system design pressure, operating pressure and test pressure should be specified realistically without the addition of arbitrary safety factors, because this practice necessities larger bellows material thickness to withstand the overstated pressures. For standard metal expansion joints the PN (nominal pressure) factor can be defined as the allowed positive operating pressure at room temperature.

5. Modulus of elasticity at design temperature: This is the modulus of elasticity of the bellow material at the design temperature which is used to calculate spring rate and columns squirm pressure.

6. Modulus of elasticity at ambient temperature: The room temperature modulus of elasticity is used to calculate the deflection stresses.

V. MATHEMATICAL MODEL FOR AXIAL NATURAL FREQUENCY OF BELLOWS

In this work bellow is considered as a long continuous rod or a long pipe having an elemental mass m and elemental stiffness Ks. According to Timoshenko beam theory a general solution for the natural frequency is determined. Further bellow with three end conditions are considered in this work, first one is the bellow with one end fixed and other free, second one bellow with one end fixed and other attached to a weight and the final condition, bellow with both end fixed.

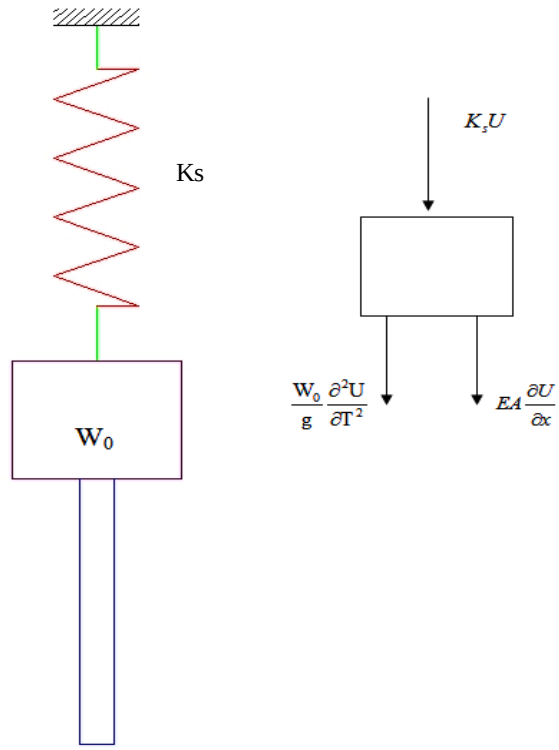

Figure 3 Mathematical model of bellow

By using the beam theory axial natural frequencies of bellow can be found out by the equation;

$$\frac{\partial^2 u}{\partial t^2} = a^2 \frac{\partial^2 u}{\partial x^2} \qquad (1)$$

Where u is the axial displacement of the pipe in mm, T is the time in seconds,

$$a = \sqrt{\frac{E}{\rho}} = \sqrt{\frac{Eg}{v}}$$

E is the young's modulus of the pipe material in MPa, g is the acceleration due to gravity in mm/s2 and v is the weight per unit volume of the pipe in N/mm3.
The general solution for (1) is;

$$u = \sum_{i=1}^{\infty}\left[A_i \sin\sin\left(\frac{\omega}{a}\right)x\right]\left[C_i \sin\sin \omega t + D_i \cos\cos wt\right] \qquad (2)$$

From the FBD of the system equilibrium equation is;

$$AE\frac{\partial u}{\partial x} + \frac{W_o}{g}\frac{\partial^2 u}{\partial T^2} + K_s u = 0 \qquad (3)$$

Where A is the cross-sectional area of the bellow in mm2, and by differentiating equation (2) with respect to x and t we get;

$$\frac{du}{dx} = A' \times \frac{\omega}{a} \times \cos\cos\left(\frac{\omega}{a}\right)x[C'\sin\sin \omega t + D'\cos\cos wt] \qquad (4)$$

$$\frac{d^2 u}{dt^2} = -A'\sin\sin\left(\frac{\omega}{a}\right)x[C'\omega\sin\sin \omega T + D'\omega\cos\cos \omega T] \qquad (5)$$

Substituting the equation (4) and (5) into equation (3) then the equation becomes;
Further simplification we get;

$$AE\frac{\omega_i}{a}\cos\cos\frac{\omega_i}{a}L-\frac{W_0}{g}\omega_i^2\sin\sin\frac{\omega_i}{a}L+K_s\sin\sin\frac{\omega_i}{a}L=0 \qquad (6)$$

The term L/a can be further simplified as;

$$\frac{L}{a}=\sqrt{\frac{LAv}{AEg/L}}=\sqrt{\frac{G/g}{P/L\frac{\partial u}{\partial x}}}=\sqrt{\frac{G}{gK_n}}$$

(7)

Where G is the weight of the pipe in N, P is the applied axial force in N, and Kn is the axial spring rate of the pipe in N/mm.

$\therefore$ G = LAv

$$E=\frac{\left(\frac{Q}{A}\right)}{(\frac{\partial u}{\partial x})}$$

$$K_n=\frac{Q}{L(\frac{\partial u}{\partial x})}$$

Substituting the value of equation (7) in equation (6) we get;

$$AE\frac{\omega_i}{a}\cos\omega_i\sqrt{\frac{G}{gK_n}}-\frac{W_0}{g}\omega_i^2\sin\omega_i\sqrt{\frac{G}{gK_n}}+K_s\sin\omega_i\sqrt{\frac{G}{gK_n}}=0 \qquad (8)$$

The axial natural frequencies of the bellows can be calculated by using the above equation with different end conditions.

Condition 1: One end of the bellows is fixed and other end free, i.e. W0 = 0 and Ks = 0;

Substituting the values in equation (8) we get;

$$\cos\omega_i\sqrt{\frac{G}{gK_n}}=0$$

$$\Rightarrow \omega_i\sqrt{\frac{G}{gK_n}}=\frac{(i-1)\pi}{2}$$

$$\Rightarrow \omega_i=\frac{(i-1)\pi}{2}\sqrt{\frac{gK_n}{G}}$$

Where 'i' is known as the order number of natural frequency, i = 1, 2, 3, 4….

$$\therefore f_i=\frac{\omega_i}{2\pi}$$

$$\Rightarrow f_i=\frac{\frac{(i-1)\pi}{2}\sqrt{\frac{gK_n}{G}}}{2\pi}$$

Substituting the value of g = 9806.65mm/s2 the frequency equation is;

$$f_i=49.5(i-0.5)\sqrt{\frac{K_n}{G}} \qquad (9)$$

Condition 2: One end fixed and other end attached to a weight i.e. W0 $\neq$ 0 and Ks = 0

Substituting the values in equation (8) we get;

$$AE\frac{\omega_i}{a}\cos\omega_i\sqrt{\frac{G}{gK_n}}=\frac{W_0}{g}\omega_i^2\sin\omega_i\sqrt{\frac{G}{gK_n}}$$

Dividing by $\cos\omega_i\sqrt{\frac{G}{gK_n}}$ and rearranging the terms, equation becomes

$$\omega_i\sqrt{\frac{G}{gK_n}}\tan\omega_i\sqrt{\frac{G}{gK_n}}=\frac{G}{W_0} \qquad (10)$$

Assuming $\beta_i=\omega_i\sqrt{\frac{G}{gK_n}}$ and $\alpha=\frac{G}{W_0}$ then the equation (10) become;

$$\beta_i\tan\beta_i=\alpha \qquad (11)$$

$$\beta_i=(i-1)\pi+\theta_i$$

Where $0<\theta_i<\frac{\pi}{2}$

Therefore the axial natural frequency becomes

$$f_i=\frac{\omega_i}{2\pi}=\frac{\beta_i}{2\pi}\sqrt{\frac{gK_n}{G}}=15.76\beta_i\sqrt{\frac{K_n}{G}} \qquad (12)$$

Condition 3: Both end of the bellows are fixed, i.e. W_0 = 0 and Ks = ∞;

Substituting the values in equation (8) we get;

$$\sin\omega_i\sqrt{\frac{G}{gK_n}}=0$$

$$\Rightarrow \omega_i\sqrt{\frac{G}{gK_n}}=\frac{i\pi}{2}$$

$$\Rightarrow f_i=\frac{\omega_i}{2\pi}=49.5i\sqrt{\frac{K_n}{G}} \qquad (13)$$

VI. NUMERICAL SIMULATION

In order to perform numerical simulation, MATLAB R2008 software is selected. MATLAB is easy and user friendly software. A MATLAB code is generated according to the mathematical model. The program generation is done on the MATLAB editor window. The stages for simulation are shown in figure 3. In this process the primary stage is to assign the material properties of the bellows like modulus of elasticity, density, specific weight and poisson's ratio etc., second stage is to assign the dimensions of the bellow like the OD, number of convolutions, pitch and thickness. Then the final equations obtained from the mathematical model with different condition are provided and finally program run is executed, which finally plots the required axial natural frequencies of the bellow.

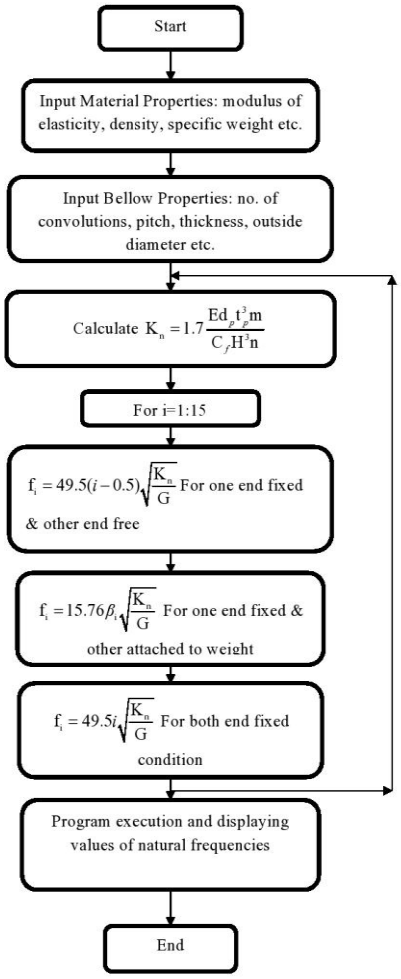

Figure 4 Steps for numerical analysis

For the simulation SA-240 321 material is selected having an elastic modulus 183090 N/mm^2.In this present analysis, a U-shaped bellow is selected. The value of axial spring rate (K_n) for bellow is calculated according to the EJMA standard equations [2]. The bellows outside diameter is 147mm, thickness is 0.9mm, pitch and height of convolution is 8mm. Using equation (9), (12) and (13) natural frequencies are found according to the boundary conditions.

TABLE 1
SPECIFICATION OF BELLOW

Parameters	**Specifications**
Expansion joint material	SA-240 321
Modulus of elasticity	195000 N/mm2
Bellows yield stress	157.39 N/mm2
Poisson's ratio	0.3
Bellow material condition	Formed
Bellow type	U-shaped
Bellow inside diameter	131mm
Convolution depth	8mm
Convolution pitch	8mm
Total number of convolution	9
Nominal thickness of ply	0.3
Total number of plies	3
End tangent length	13

TABLE 2
CHEMICAL COMPOSITION OF BELLOW

C	Cr	Mn	Ni	P	S	Si	Ti
Max		Max		Max	Max	Max	
0.0008	17% - 20%	0.02	9% - 13%	0.0004	0.0003	0.0075	Trace*

Table 1 and 2 shows the detail specification and chemical composition of bellow used in this work.

A. Condition1: Bellows with both end fixed.

Table 3 and fig.5 shows the natural frequencies of bellow with both end fixed condition. A series of MATLAB program is executed, according to the mathematical relations from equation (9), (12) and (13) and varying the parameter 'n'(no. of convolutions), natural frequencies are found. For this boundary condition the range of frequencies lies from 2125.6-6367.6, 1880.5-5906.5 and 1713.1-5213.14Hz for the number of convolutions n=8, 9 and 10 respectively.

TABLE 3
NATURAL FREQUENCIES OF BELLOW WITH BOTH END FIXED CONDITION

Sr.No.	n=8	n=9	n=10
1	2125.6	1880.5	1713.1
2	2364.3	2174.7	2042.2
3	2373.2	2187	2055.6
4	3407.7	2975.9	2653.4
5	3417.7	3026.5	2689
6	3426.4	3236.4	2948.5
7	3922.33	3592.54	3221.82
8	4228.36	3881.79	3470.84
9	4533.70	4171.04	3719.83
10	4839.38	4460.30	3968.83
11	5145.06	4749.51	4217.57
12	5450.73	5038. 81	4466. 71
13	5756.49	5328.08	4715.86
14	6062.03	5617. 7	4964.86
15	6367.76	5906.55	5213.14

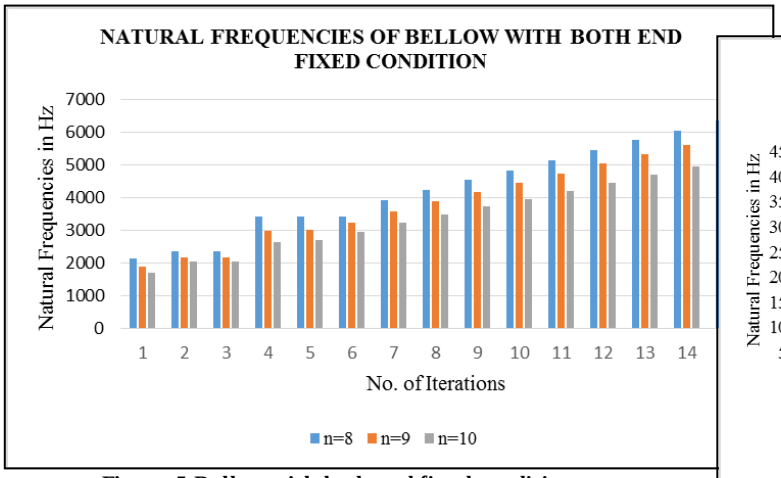

Figure 5 Bellow with both end fixed condition

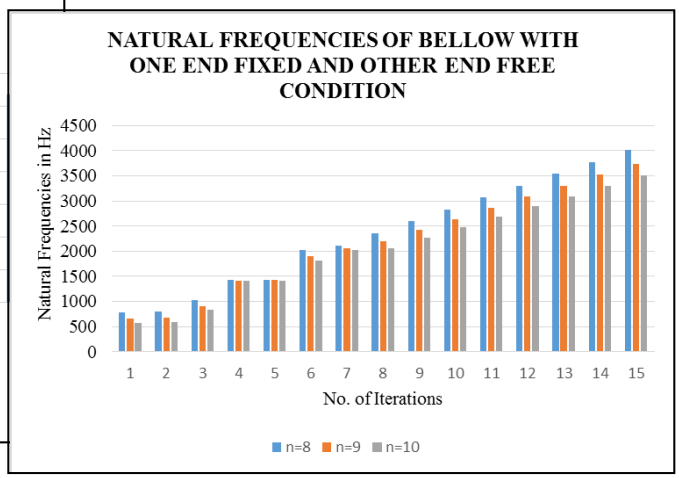

Figure 6 Bellow with one end fixed and other end free condition

B. Condition2: Bellows with one end fixed and other end free.

Table 4 and fig.6 shows the natural frequencies of bellow with one end fixed and other end free condition. A series of MATLAB program is executed, according to the mathematical relations from equation (9), (12) and (13) and varying the parameter 'n'(no. of convolutions), natural frequencies are found. For this boundary condition the range of frequencies lies from 779.6-4007.887, 660.6-3740.174 and 578.6-3507.76Hz for the number of convolutions n=8, 9 and 10 respectively.

TABLE 4
NATURAL FREQUENCIES OF BELLOW WITH ONE END FIXED AND OTHER END FREE CONDITION

Sr.No.	n=8	n=9	n=10
1	779.6	660.6	578.6
2	800.3	687.8	595.8
3	1038.9	917.35	829.3
4	1435.7	1426.4	1410.2
5	1420.9	1419.3	1415.6
6	2028.5	1908.3	1816.3
7	2100.96	2060.3	2030.26
8	2359.77	2200.21	2058.41
9	2595.22	2420.2	2265.46
10	2830.66	2640.203	2472.51
11	3066.11	2860.19	2679.56
12	3301.55	3080.19	2886.61
13	3536.997	3300.184	3093.66
14	3772.442	3520.179	3300.71
15	4007.887	3740.174	3507.76

C. Condition3: Bellows with one end fixed and other attached to a weight.

Table 5 and fig.7 shows the natural frequencies of bellow with one end fixed and other end attached to a weight condition. A series of MATLAB program is executed, according to the mathematical relations from equation (9), (12) and (13) and varying the parameter 'n'(no. of convolutions), natural frequencies are found. For this boundary condition the range of frequencies lies from 168.4-3301.55, 150.8-3080.19and 135.3-2886.61Hz for the number of convolutions n=8, 9 and 10 respectively.

TABLE 5
NATURAL FREQUENCIES OF BELLOW WITH ONE END FIXED AND OTHER ATTACHED TO A WEIGHT

Sr.No.	n=8	n=9	n=10
1	168.4	150.8	135.3
2	165.3	152.5	137.8
3	298.9	287.4	263.15
4	795.2	728.5	645.96
5	798.4	720.58	650.54
6	1337.4	1261.7	1200.45
7	1417.99	1320.23	1230.21
8	1653.43	1540.226	1437.26
9	1888.88	1760.22	1644.31
10	2124.33	1980.27	1851.36
11	2359.77	2200.21	2058.41
12	2595.22	2420.2	2265.46
13	2830.66	2640.203	2472.51
14	3066.11	2860.19	2679.56

15	3301.55	3080.19	2886.61

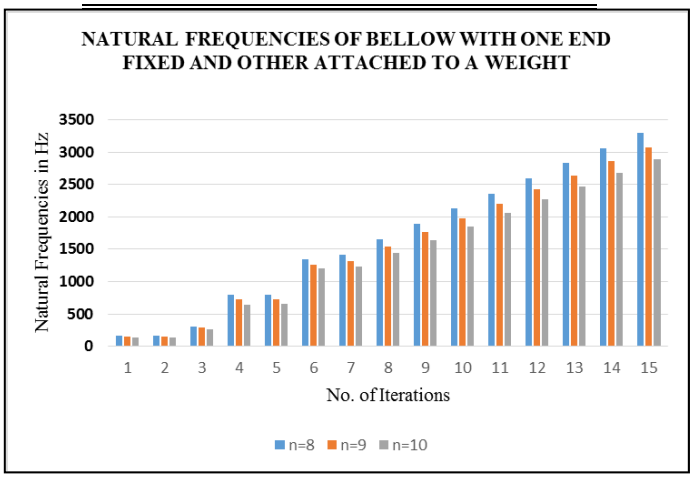

Figure 7 Bellow with one end fixed and other end attached to weight condition

VII. MODAL ANALYSIS

Modal analysis is used to determine the vibration characteristics of a structure, namely the natural frequencies and the mode shapes of the structure. The natural frequencies and mode shapes are important parameters in the design of a structure for dynamic loading conditions which determined by the inherent characteristics and the materials of a structure. In order to perform modal analysis, a solid model of metal expansion bellow has to be developed. So a solid model is generated by using Catiav5 and is transferred to iges format. Then the geometry is imported to ANSYS R15.0 Workbench.

3.1 Finite element procedure: Numerical simulation is followed by three stages; pre-processing, solution, post-processing as shown in the fig8. In pre-processing stage modeling, defining material properties like young's modulus, poisson's ratio, density etc. and meshing is done. In this first stage solid model bellow has to create in iges format and imported to the ANSYS workbench and the material properties are provided by using the project and editor window. In this work the mesh generation, a fine meshing has to carry out. Second stage involves applying the boundary conditions on the model and generating the solution. In the second stage the bellow with both end fixed condition, one end fixed and one end free and finally both end free condition is applied and solutions are generated. In post-processing the modal analysis has to carry out and results are plotted. In this stage the modal solutions with modal frequencies and mode shapes are generated.

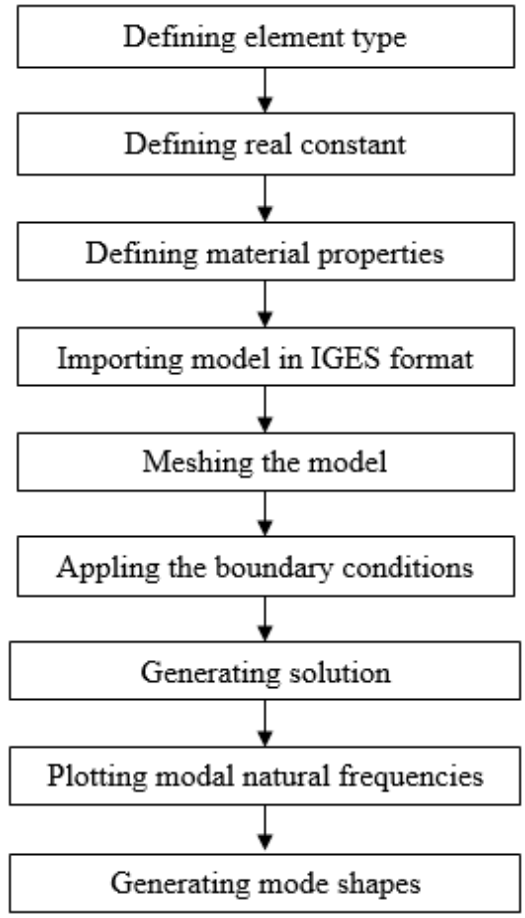

Figure 8 Steps for modal analysis

A. *Mode shapes of bellows with both end fixed.*

TABLE 6
MODAL FREQUENCIES OF BELLOW WITH BOTH END FIXED CONDITION

Sr.No.	n=8	n=9	n=10
1	2128.6	1885.9	1702.1
2	2369.3	2175.6	2046.2
3	2371.2	2182.9	2058.3
4	3405.7	2971	2632.6
5	3411.7	3028.7	2695.3
6	3428.4	3222.6	2950.8

Table 6 shows the modal frequencies of bellow with both end fixed condition. Fig. 9 and 10 shows the mode shapes of bellow having maximum deformation at 102.5mm for 8 convolutions and 87.7mm for 10 convolutions.

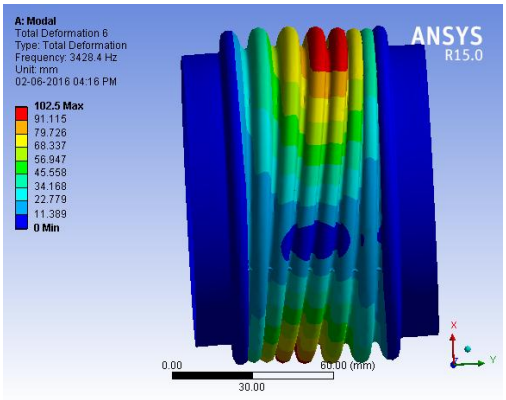

Figure 9 Maximum deformation of bellow with 8 convolutions (both end fixed)

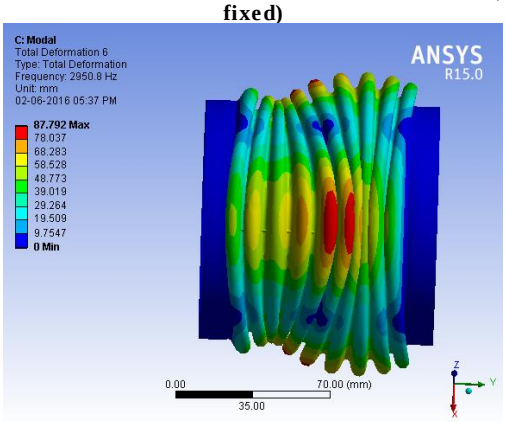

Figure 10 Maximum deformation of bellow with 10 convolutions (both end fixed)

B. Mode shapes of bellows with one end fixed and other end free.

Table 7 shows the modal frequencies of bellow with one end fixed and other end free condition. Fig. 11 and 12 shows the mode shapes of bellow having maximum deformation at 83.3mm for 8 convolutions and 98.1mm for 10 convolutions.

TABLE 7
MODAL FREQUENCIES OF BELLOW WITH ONE END FIXED AND OTHER END FREE CONDITION

Sr.No.	n=8	n=9	n=10
1	781.6	666.6	580
2	803.3	684.6	599.5
3	1028.9	915	832.4
4	1426.7	1421.4	1415.6
5	1426.9	1423.3	1419.3
6	2030.5	1904.3	1812.3

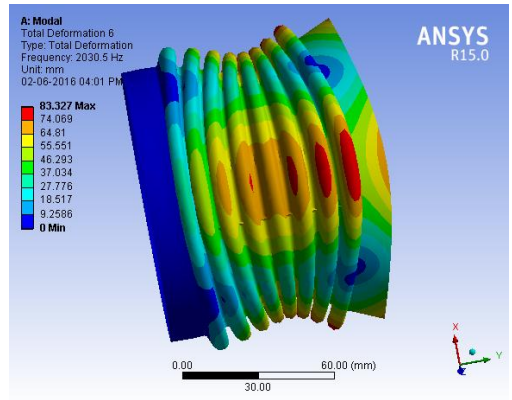

Figure 11 Maximum deformation of bellow with 8 convolutions (one end fixed other end free)

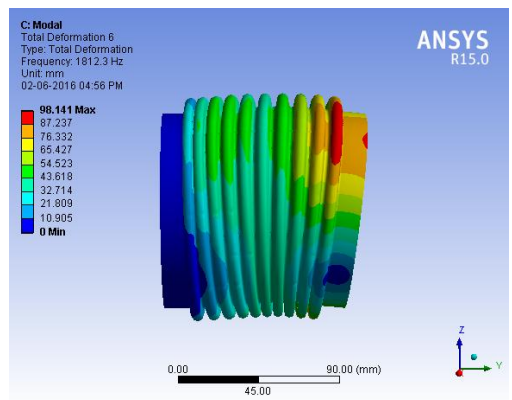

Figure 12 Maximum deformation of bellow with 10 convolutions (one end fixed other end free)

C. Mode shapes of bellows with one end fixed and other end attached to a weight.

Table 8 shows the modal frequencies of bellow with one end fixed and other end free condition. Fig. 13 and 14 shows the mode shapes of bellow having maximum deformation at 30.7mm for 8 convolutions and 30.4mm for 10 convolutions.

TABLE 8
MODAL FREQUENCIES OF BELLOW WITH ONE END FIXED AND OTHER ATTACHED TO A WEIGHT

Sr.No.	n=8	n=9	n=10
1	170.4	153.28	138.33
2	171.3	154.1	139.18
3	301.7	283.53	266.53
4	798.6	722.2	651.69
5	801.4	724.85	655.45
6	1335.4	1264.9	1203.5

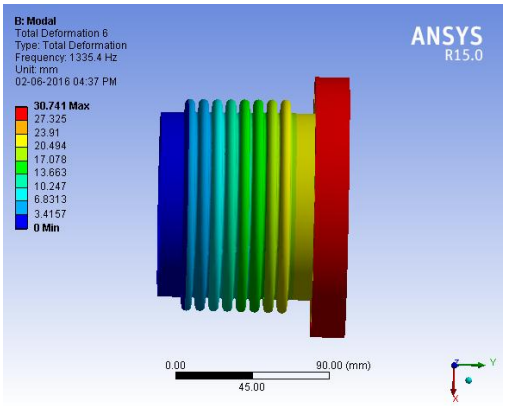

Figure 13 Maximum deformation of bellow with 8 convolutions (one end fixed and other attached to weight)

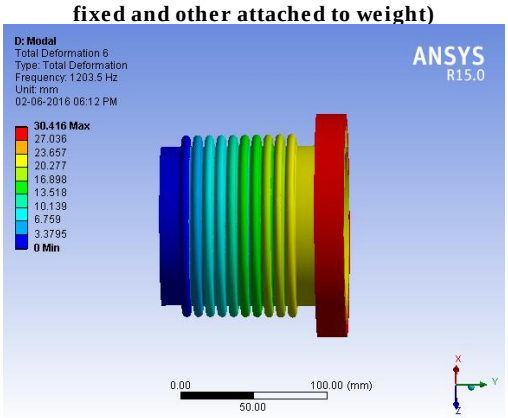

Figure 14 Maximum deformation of bellow with 10 convolutions (one end fixed and other attached to weight)

VIII. RESULTS AND DISCUSSIONS

Fig.5 shows the first fifteen axial natural frequencies of bellows with both end fixed condition having number of convolutions 8, 9 and 10. Here the frequencies lie from 2125.6-6367.6, 1880.5-5906.5 and 1713.1-5213.14Hz for the number of convolutions n=8, 9 and 10 respectively. Fig.6 shows the first fifteen axial natural frequencies of bellows with one end fixed and one end free end condition. Here the frequencies lie from 779.6-4007.887, 660.6-3740.174 and 578.6-3507.76Hz for the number of convolutions n=8, 9 and 10 respectively.Fig.7 shows the first fifteen axial natural frequencies of bellows with one end fixed & one end attached to weight condition. Here the frequencies lie from 168.4-3301.55, 150.8-3080.19and 135.3-2886.61Hz for the number of convolutions n=8, 9 and 10 respectively. Fig.8 shows step by step procedure for the modal analysis in ANSYS. For safety of the bellows and to avoid fatigue failure modal analysis is done. Table 4-6 shows the modal frequencies and Fig.9-14 shows the mode shapes of bellows with different end conditions. From the mode shapes, it is observed that maximum deformations are formed at the convolutions and to reduce this deformation and reducing the resonance one should increase the number of convolutions. Practically if the piping system used in process industries are short or some of the pipes are relatively shorter than the others, then bellows are welded to the ends of the pipe and from this work, it's clear that bellow with both end fixed condition has maximum natural frequency, so an industrial engineer has to maintain the flow rate of the fluid since there is a chance of resonance in the system. If the engineer wants to keep the flow rate of the fluid in the system, then to avoid resonance the engineer has to increase the number of convolutions of the bellow.

IX. CONCLUSIONS

The axial natural frequency is an important parameter in the design of bellows. The natural frequency is calculated by using a MATLAB code, as per the mathematical model and the mode shapes are generated using ANSYS R15.0. Bellow with the both end fixed condition shows the maximum natural frequency and bellow with one end fixed and other attached to weight shows minimum natural frequency. In modal analysis the range of frequencies of the bellow with lesser number of convolutions shows maximum deformation and larger convolutions shows a minimum deformation. So to decrease the axial natural frequency for the given flow rate and to avoid resonance number of convolution of the bellow has to increase.

ACKNOWLEDGMENT

The authors are thankful to Dr.R.K.Jain, Principal and Dr.K.K.Dhande, HOD Mechanical Engineering Dept D.Y.P.I.E.T, Pimpri, Pune and staff of the mechanical engineering dept. for their valuable guidance and support. The authors wish to thank Dr.S.H.Gawande, Associate Professor of Modern Education Society's College of Engineering, Pune for his help in formulation of the problem. At last but not least to family and friends who deserves some words of thanks.

REFERENCES

[1] ASME, ASME Boiler and Pressure Vessel Code-Section VIII, Division 1, Appendix 26 – Pressure Vessel and Heat Exchanger Joints, New York, 2000.

[2] EJMA, Standards of Expansion Joint Manufacturers Association, 9th edition, New York, 2008.

[3] H. Shaikh, G. George, H. S. and Khatak, "Failure analysis of an AM 350 steel bellows", Engineering Failure Analysis, vol. 8, no. 6, pp.571-576, 2001.

[4] G. I. Broman, A. P. Jonsson, and M. P. Hermann,"Determining dynamic characteristics of bellows by manipulated beam finite elements of commercial software", International Journal of Pressure Vessels and Piping, vol .77,no.8, pp.445-453, 2000.

[5] T. Li, "Effect of the elliptic degree of Ω-shaped bellows toroid on its stresses", International Journal of Pressure Vessels and Piping,vol. 75, no. 13, pp.951-954,1998.

[6] C. Becht, "Fatigue of bellows a new design approach", International Journal of Pressure Vessels and Piping, vol. 77, 843–850, 2000.

[7] G.H. Faraji, M.M. Mashhadi, and V.Norouzifard, "Evaluation of effective parameters in metal bellows forming process", Journal of Materials Processing Technology, vol. 209, no. 7, pp.3431-3437, 2009.

[8] G.H. Faraji, M.K.Besharati, M.Mosavi,and H. Kashanizadeh, Experimental and finite element analysis of parameters in manufacturing of metal bellows, International Journal of Manufacturing Technology, Vol .38, no.7-8, pp.641-648, 2008.

[9] B.H.Kang, M.Y. Lee, S.M.Shon, and Y.H. Moon, "Forming various shapes of tubular bellows using asingle-step hydroforming process",

Journal of Materials Processing Technology, Vol.194, no. 1-3, pp.1-6, 2007.
[10] H.W.Kang, I.H.Lee, D.W. Cho, Development of a micro-bellows actuator using micro-stereolithography technology, Microelectronic Engineering, vol. 83, no.4-6, pp.1201–1204, 2006.
[11] V. Jakubauskas, D. S. Werner, "Transverse natural frequencies and flow induced vibrations of double bellows expansion joints", Journal of Fluids& Structures, vol.13, no.4, pp.461–479, 1999.
[12] A. K. Jha, V. Diwakar, K.Sreekumar, "Stress corrosion cracking of stainless steel bellows of satellite launch vehicle propellant tank assembly", Journal Engineering Failure Analysis, vol.10, no.6, pp.699–709, 2003.
[13] S.W.Lee, "Study on the forming parameters of the metal bellows", Journal of Material Process Technoogy, vol.130–131, pp.47–53, 2002.
[14] G. Wang, K.F., Zhang, D.Z. Wu, J.Z. Wang, Y.D.Yu, "Superplastic forming of bellows expansion joints made of titanium alloys", Journal of Material Process Technology, vol. 178, pp.24–28, 2006.
[15] Y.Z. Zhu, H,F.Wang, Z.F.Sang, The effect of environmental medium on fatigue life for u-shaped bellows expansion joints,International Journal of Fatigue, vol. 28, no.1, pp.1–5, 2005.
[16] J.Reich, A.Cardella, "Experimental verification of the axial and lateral stiffness of large W7-X rectangular bellows", Fusion Engineering and Design, pp.1924-1928, 2007.
[17] F. Elshawesh, A. Elhoud, "Corrosion Fatigue of Incoloy 825 Flare Gas Line Bellows of Expansion Joints" ASM International 2014, pp.15:7-14, 2014.
[18] William P. Schonberg, "Static Testing of U-Shaped Formed Metal Bellows", International Journal of Pressure Vessels and Piping, vol.41,pp.207-226,1990
[19] Y Suetsugu, "Bellows design and testing for KEKB"Vacuum,vol. 47,pp.629 – 631.
[20] QuCai-hong, Han Wei, Wang Yan-ming, "Analysis of Failure for mental bellows based on ANSYS", Advanced Materials Research, vol. 1044-1045, pp.910-913, 2014
[21] Sungchul Kim, Bongchoon Jang, "Development of Bellows Design Software using MATLAB", Indian Journal of Science and Technology, vol 8, pp.201-206, 2015
[22] Jin-Bong, Kim, "The Effects of Convolution Geometry and Boundary Condition on the Failure of Bellows", Indian Journal of Science and Technology, vol 8, pp.462-466, 2015

The author, Mr. Vishnu Rajan, born on 22-06-1990 graduated in Mechanical Engineering from D.Y.Patil Institute of Engineering & Technology, Pimpri, Pune, Maharashtra, India in the year 2013. He has worked as a Trainee engineer at Abros Enterprises,Talawade, Pune. He is currently pursuing his postgraduate study in Mechanical Engineering with specialization in Design Engineering from Dr. D.Y.Patil Institute of Engineering & Technology, Pimpri, Pune, Maharashtra , India.

The author, Dr.L.G.Navale, born on 26-05-1948 graduated in Mechanical Engineering from College of Engineering, Pune, Maharastra in the year 1970. He did his post graduation in Mechanical Engineering with specialization in Design Engineering at College of Engineering, Pune, Maharastra. The author has obtained his Ph.D degree in the year 2004 from College of Engineering, Pune, Maharastra. The author has been engaged in active research in the field of vibration, machine tool design and tribology for the last couple of years. The author has 80 research papers to his credit which have been published in various national and international journals. He has worked on govt. colleges and has been principal at MESCOE,Pune, Maharastra for 7 years. He is working as Professor emeritus in the Department of Mechanical Engineering at D.Y.P.I.E.T Pimpri, Pune, Maharashtra, India.