Numerical Simulation of Providing Y-Ring Against Classical Integrity To Reduce Stresses At Skirt-Head Junction

Prasad D. Dudhane, Prof. D. H. Burande

Abstract— **Recently, in oil and gas industries vertical pressure vessel usually fails at the skirt-head junction due to high localized stresses. The Vessel operating at high temperature supported on skirt, mainly overstressed due to high temperature gradient and high pressure. Due to excessive temperature at junction in hot operating cases can cause unpredicted high thermal stresses and high pressure cause high structural stresses which make design of vessel critical. High temperature operating vessel transfers large amount of heat to the skirt support which is at room temperature. Some acceptable skirt weld details are given by ASME code but durability of skirt-shell-head junction need to verify for high temperature applications. Also skirt-head junction can be decided with respect to vessel service, maximum design temperature and pressure. There are many ways of reducing large amount high localized stress. This can be done by provision of thermal sleeves in pressure retaining components or Hot-box design at skirt-to-vessel junction. While so called design by rule approach is sufficient for majority of cases there are sometimes features of design which necessitates the use of design by analysis methods. This paper describes impact of welded type arrangement and Y forging type arrangement at skirt-shell-head junction. FEA is a proven cost saving tool and can reduce design cycle time therefore it can be used as accurate tool to investigate stresses in skirt support. The analysis is accomplished in accordance with ASME B&PV code, Section VIII Division 2.**

Keywords: pressure vessel, Thermo-mechanical FEA, Skirt support, Y-ring

I. INTRODUCTION

Pressure vessels are the container used for storing, receiving or carrying fluids under pressure. The storage medium is at a particular pressure and temperature. The cylindrical vessel is closed at both ends by means of dished end, which may be flat, hemispherical, conical, ellipsoidal and torispherical.[1] The pressure vessels may be horizontal or vertical. The horizontal pressure vessels are usually supported on two symmetrically spaced saddle supports or cradles and vertical pressure vessel are supported on a lug or skirt support. Type of support used depends on the orientation and pressure of the pressure vessel. Support for the pressure vessel must be capable of withstanding heavy loads from the pressure vessel also seismic loads and wind load. [2] The skirt supporting system for vertical vessel plays an important role in the performance of the equipment. Proper skirt supporting system gives the safety and better efficiency. The skirt may be welded directly to the bottom dished head, flush with the shell or to the outside of the shell. The skirt can be either lap, fillet, or butt welded directly to the head or shell. The bottom skirt supports are critical components since they are to be designed with much care to avoid failure due to temperature gradient. Skirt to dished end junction in vertical pressure vessel is one of such critical junction which is often subjected to different loads. [3] These loadings include internal pressure inside vessel, wind & seismic shear force and moments, operating weight of vessel. The dish has inside temperature greater than outside temperature. While skirt is at normal atmospheric temperature and pressure. Due to temperature difference there have chances of developing thermal stress. Due to high pressure and temperature loading there is possibility to generation of cracks / failure at skirt dished end joint.

The objective of this paper is to modify the design of pressure vessel by providing Y- ring at the Shell-Skirt-Head junction area, in order to avoid the failure of skirt support due to thermal and mechanical loading. In classical method all loads are transferred to skirt shell through skirt to dished end junction only whereas in Y- ring structure, the total load is divided into three different junctions such as Shell to Y-ring, head to y-ring and Skirt to Y-ring junction.

In this analysis, skirt support for vertical vessel was analyzed as per the guidelines given in the ASME (American Society of Mechanical Engineering) section VIII division 2 standards. The stress analysis was carried out for this support using a general purpose FEM code, ANSYS 15. The coupled field (Structural and Thermal) Analysis was carried out for skirt support to find out the stresses in the support. The analysis's results were compared with ASME code allowable stress values.

II. LITERATURE REVIEW

Sagar M. Sawant and Deepak P. Hujare studied the effect of the hot box provided in the crotch space. They analyze that by providing air picket (Hot box) at the skirt and shell junction the overall stress concentration and temperature can reduce considerable. The temperature gradient with air pocket is less than temperature gradient without air pocket. [1] Kiran D. Parmar and Dinesh D. Mevada present guideline in thermal analysis for pressure vessel. They concluded that in pressure vessel different types of failure are developed also skirt to dished end junction of the pressure vessel in which maximum cracks are developed. [2] V. Chaudhry, A. Kumar, S. M.

Prasad D. Dudhane, Department of Mechanical Engineering, Sinhgad College of Engineering, Savitribai Phule Pune University, Pune. (e-mail: prasaddudhane1@gmail.com)

D. H. Burande, Department of Mechanical Engineering, Sinhgad College of Engineering, Savitribai Phule Pune University, Pune. (e-mail: dhburande.scoe@sinhgad.edu)

Ingole, A. K. Balasubramanian and U.C. Muktibodh has studied a detailed thermo mechanical analysis for Tarapur Atomic Power Station using finite element analysis and the result are compare with analytical solution. They estimated that temperature and stress distribution under various operating condition across the wall thickness of core belt line region. [4] A. Th. Diamantoudis, Th. Kermanidis compare the design of pressure vessel of steel alloy and high strength steel using the rules of design by analysis and design by formula. They concluded that the application of design of analysis leads to much less conservative design parameter. [5]

III. METHODOLOGY

For designing the pressure vessel, the selection of code are important as a reference guide to achieve the safety pressure vessel. Design of pressure vessel component is done by using ASME codes Section VIII, Div 2. Two models of pressure vessel with classical method and Y- ring structure were employed. After preparing 3-D model of pressure vessel, the model of pressure vessel analyzed according to the given thermal boundary condition and mechanical boundary condition. After analyzing model for classical method and with Y- ring support structure, maximum equivalent stress, total deformation and temperature distribution are identified then comparing results of the both conditions.

IV. DESIGN OF PRESSURE VESSEL

Design of the pressure vessel as per the ASME B&PV code, Section VIII. [7]

A) Table 1 gives the design data for pressure vessel

TABLE I
DESIGN DATA FOR PRESSURE VESSEL

Sr.no.	Designation	Dimension
1	Design pressure (P)	9.56 Mpa
2	Design temperature (T)	200 ˚c
3	Inner diameter of Shell (D)	3000 mm
4	Straight flange length	170 mm
5	Head type	Hemispherical
6	Shell height (L)	15700 mm
7	Outside diameter of skirt support (D_s)	3080 mm
8	Skirt height (L_s)	2600 mm
9	Joint efficiency	1
10	Total weight of the vessel (W)	275158.328 kg
11	Moment at the base (M_t)	1.184 E+09 N-mm

B) Material specification

Table 2 gives the material properties like modulus of elasticity, maximum allowable stress are taken from ASME Sect. II Part D.

TABLE II
COMPONENTS OF PRESSURE VESSEL AND ITS MATERIAL

Component	Material
Shell	SA 516 Gr 70
Head	SA 516 Gr70
Skirt support	SA 516 Gr 70
Y- ring	SA 315Gr 2
Insulation	Cumicrete 60

Allowable stress at design temperature 200˚c is equal to 138 N/mm^2 , allowable stress (S) = 138 N/mm^2 [8]

C) Thickness of Shell

The minimum thickness or maximum allowable working pressure of cylindrical shells shall be the greater thickness or lesser pressure as given by (1) or (2) below.

Circumferential Stress (Longitudinal Joints)

When the thickness does not exceed one-half of the inside radius, or P does not exceed 0.385SE, the following formulas shall apply:

$$t=\frac{PR}{SE-0.6P} \quad (1)$$

Longitudinal Stress (Circumferential Joints)

When the thickness does not exceed one-half of the inside radius, or P does not exceed 1.25SE, the following formulas shall apply:

$$t=\frac{PR}{2SE+0.4P} \quad (2)$$

Calculation for circumferential stress, Checking for 0.385SE

S= 138 Mpa, E=1

0.385SE= 53.13 > 9.56

$$t=\frac{PR}{2SE+0.4P}$$

t= 108.41 ≈ 110 mm.

D) Thickness of head

$$t_h=\frac{PR}{2SE-0.2P} \quad (3)$$

t_h= 52.31 ≈ 54 mm

E) Thickness of skirt support

$$t_s=\frac{12Mt}{\pi SER\,\hat{}\,2}+\frac{W}{D\pi SE} \quad (4)$$

t_s = 15.84 ≈ 20 mm

V. THREE DIMENSIONAL MODELING OF PRESSURE VESSEL

For analysis purpose a 3-D model of pressure vessel model is needed. This model is developed using CATIA V5 software. The model is shown in below

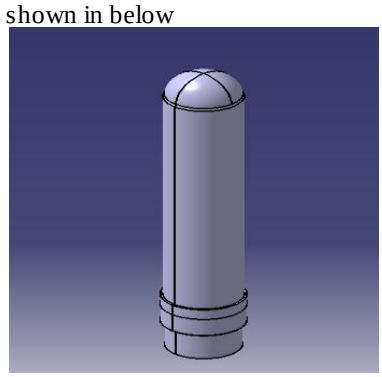

Fig. 1- model of the pressure vessel

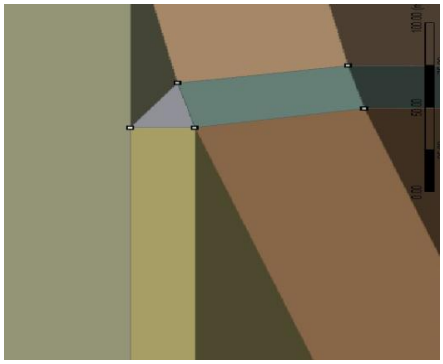

Fig. 2 - Skirt-Head junction in classical method

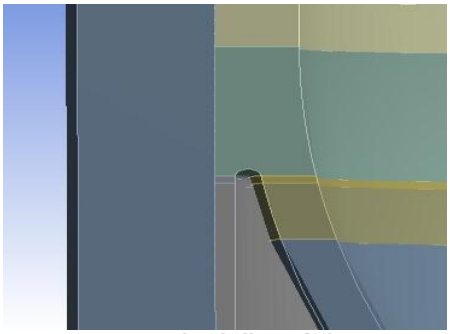

Fig. 3 - Y- ring at the Shell-Head-Skirt junction

VI. Finite Element Model

The analysis of the skirt were performed using axisymmetric solid finite elements. The same mesh was used either for the thermal analysis and structural analysis. Since the region of interest for the study was confined to the connection between the skirt and the pressure vessel, there was no need to discretize the entire vessel and skirt. For analysis purpose only half model is considerd.

A) Constraints, forces assign to pressure vessel model

a) Fixed support

For analysis purpose fix the pressure vessel model at bottom of the skirt.

b) Steady State Thermal

For analysis purpose assign temperature = 200 ˚c for inner surface of the pressure vessel model and 22˚c for outer surface of the pressure vessel model.

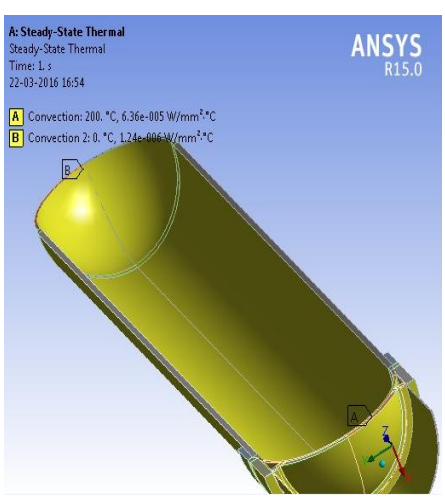

Fig. 4- Thermal boundary condition

c) Static Structural

For analysis purpose assign pressure = 9.56 Mpa from inner side of the pressure vessel model and standard earth gravity g= 9.8066 m/s^2

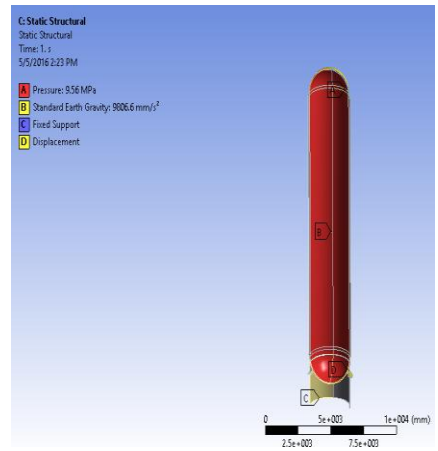

Fig. 5- Mechanical boundary conditions

VII. Analysis of Pressure Vessel Model With Classical Method And Y-Ring Support System

A) Meshing of the model

Meshing is the method of dividing the model into the number of element to obtain the good accuracy in the analysis. As the number of element increase, the accuracy of analysis increases. Meshing of the model is done by using hexahedron element in Ansys workbench. The model is mesh for different size of these elements for getting different number of nodes. The meshing of model is shown below.

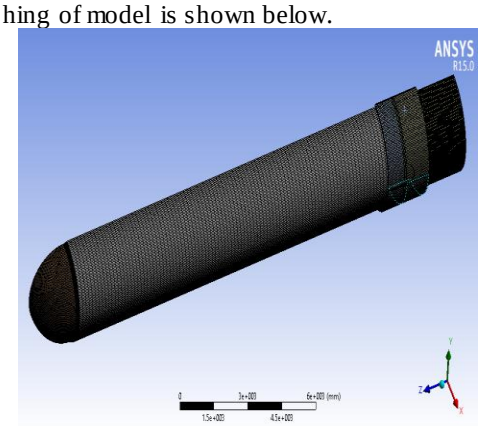

Fig. 6 - Meshing of the pressure vessel model

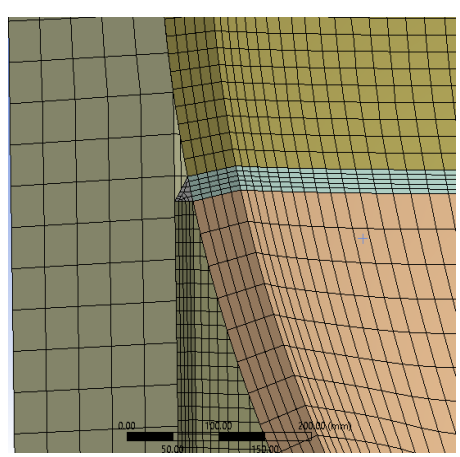

Fig. 7 – Meshing at skirt-Head junction in classical method

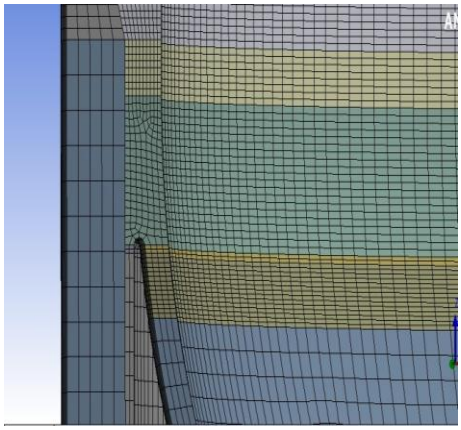

Fig. 8 - Meshing of the Y-ring model

B) Analysis method

The steady-state thermal analysis considered the heat exchange in the inner surfaces of the pressure vessel with a bulk temperature of 200˚c and in the outside surface of the skirt with a bulk temperature of 22˚c. For thermal loads, the nodal temperature distribution obtained from the thermal analysis has been transferred as an input body load boundary condition to structural analysis.

VIII. Results And Discussions

A) Result of the classical method

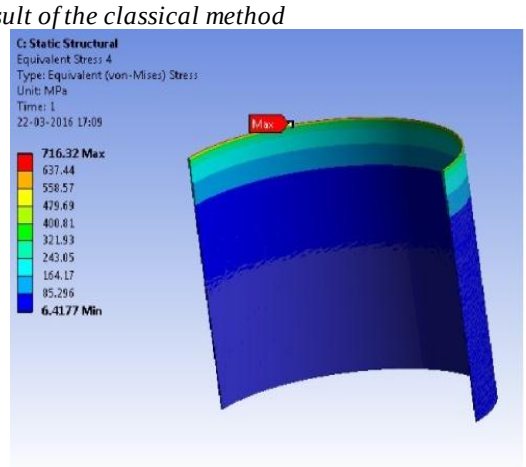

Fig. 9 - Maximum stresses in the model (classical method)

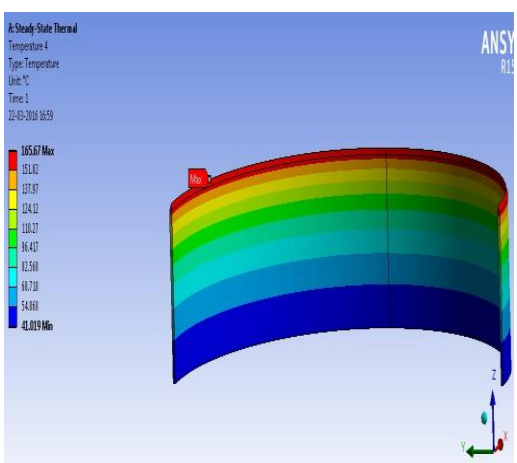

Fig. 10 - Temperature profile of Skirt support

B) Result of Y-ring model

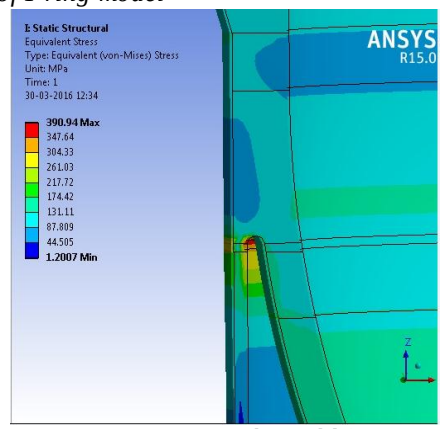

Fig. 11- Maximum stresses in the model (Y-ring model)

From the figure it was observed that, maximum equivalent stress in classical method is 716.32 Mpa whereas in Y ring integrity, the maximum equivalent stress is 390.94 Mpa. According above results by providing Y-ring at the Shell-Head-Skirt junction, the overall stress concentration can reduce considerable and surely there is considerable reduction in peak stress as compared to classical method.

Table III
RESULT TABLE

Sr. No.	Method	Max. allowable stress= (3*S)(Mpa)	Max. Equivalent stress (Mpa)
1	Classical	414	716.32
2	Y- Ring	414	390.94

IX. Conclusion

In classical integrity the stress are more concentrated near welding area which is most important for any type of vertical vessel. For the same vessel by using Y-ring the stress which was concentrated at welding area are get distributed in three junction and stress concentration is reduced. The stresses are concentrated in y-ring arrangement near curvature area.

From the FEA Results the Y-ring is forge part and can be replaced to classical integrity joining system.

References

[1] Sagar M. Sawant, Deepak P. Hujare, *" Thermo-mechanical analysis for skirt of pressure vessel using FEA approach."* International Academy of science, Engineering and Technology. July 2013, pp. 13-20.

[2] Amit patil, Amol kolhe, *"Finite element analysis: pressure vessel with angular leg supports."* International journal of mechanical engineering and robotics research.

[3] Kiran D. Parmar, Kiran A. Patel, Dinesh D. Mevada, *"Thermal analysis for skirt dished end joint of pressure using finite element analysis approach."* International journal of Advanced Engineering Research and Studies.

[4] V. Chaudhry, A. Kumar, S. M. Ingole, A. K. Balasubramanian, U. C. Muktibodh, *"Thermo-mechanical transient analysis of reactor pressure vessel."* Elsevier, procedia engineering 86 (2014) 809-817.

[5] A.Th. Diamantoudis, Th. Kermanidis, *"Design by analysis versus design by formula of high strength steel pressure vessels: a comparative study."* Elsevier, International Journal of Pressure Vessels and Piping 82 (2005) 43–50.

[6] H.-G. Willschutz, E. Altstadt, B.R. Sehgal, F.-P. Weiss, *"Coupled thermal structural analysis of LWR vessel creep failure experiments."* Elsevier, Nuclear Engineering and Design 208 (2001) 265–282.

[7] ASME, ASME boiler and pressure vessel code Section VIII, Div 1 and 2, New York;(2007)

[8] ASME, ASME boiler and pressure vessel code Part D (2013).