International Engineering Research Journal Page No 1460-1465

Evaluation of Optimum Damping Ratio and Vibration Analysis of Mounting Bracket of Automotive Water Pump

R. R. Chougule[1], T. A. Jadhav[1], R. Appa[2], P. C. Shinde[2]

***Abstract*—Most of the mechanical instruments have vibrations due to surrounding disturbances created or many times vibrations are due to its own motion. CAE has been an important tool in the process of automotive product development. Random vibration loads are also responsible for the fatigue failure of the component. Water pump is mounted on the mounting bracket and bracket is fixed on engine. The objective is to make geometrical modification in the mounting bracket and to choose appropriate material to avoid its failure due to random vibrations. Vibration analysis results of existing bracket and modified bracket are compared. In vibration analysis of component, it is necessary to apply correct damping ratio to simulate at realistic condition. Due to assumption of damping ratio many times vibration analysis results did not matched with experimental results. This work also consists of evaluation of optimum damping ratio for vibration analysis of mounting bracket of automotive water pump. Value of damping ratio is calculated by three different methods and their results are compared.**

***Index Terms*—Damping, optimum damping ratio, fatigue failure, geometric modification, random vibrations, vibration analysis.**

I. Introduction

Electronically commutated water circulation pump with its brushless DC motor is a dependable alternative to conventional motor vehicle pumps with their wear-prone mechanical commutation systems. The pump is regulated electronically and with all usual engine coolants. As it has low number of moving parts, the pump operates very smoothly and quietly. The pumps are chiefly used wherever additional cooling or heating functions need to be performed. It is mounted on engine with the help of bracket.

[1]R. R. Chougule, Department of Mechanical Engineering, Sinhgad College of Engineering, Savitribai Phule Pune University, Pune.
(email: chougule.rohit9@gmail.com)
[1]T. A. Jadhav. Department of Mechanical Engineering, Sinhgad College of Engineering, Savitribai Phule Pune University, Pune.
(e-mail: tajadhav.scoe@sinhgad.edu)
[2]R. Appa, Associate Manager, KSPG Automotive India Pvt Ltd. Pune. (e-mail: raju.appa@in.kspg.com)
[2]P. C. Shinde, Senior engineer-CAE, KSPG Automotive India Pvt Ltd. Pune. (e-mail: prashant1.shinde@in.kspg.com)

It is subjected to loads due to the engine operations and vehicle road conditions. These loads are typically random in nature. It is very important to carry random vibration analysis of the bracket for getting an optimized design. Stability of bracket towards random vibration depends on geometry, stiffness, and material of bracket. Damping has important influence on vibration and consequently the identification of damping is a very rudimentary work in the research of vibration control. The problem of damping identification very often arises when analysing dissipative dynamic systems. Generally speaking, damping is associated with a dissipation of vibration energy explained by internal (friction, micro structural effects etc.) or external (fluid/ structure or soil/ structure interactions, etc.) mechanisms. Three types of damping present in system i.e. viscous damping, frictional or Coulomb damping, material or Hysteretic damping. Damping present in the system is represented by the term damping ratio [1]. It is the ratio of actual damping to the critical damping present in the system. While doing random vibration analysis of system analyst must know the optimum value of damping ratio present in system. Analyzing the system response with correct damping ratio value will be easy to predict the response of system [2]. A variety of techniques and methods for damping identification have been developed, most of which can be classified into time domain and frequency domain. In time domain, there are logarithmic decrement method, Smith least squares method, least squares complex exponential (LSCE) method, limit envelopes method, Hilbert transform method, etc. In frequency domain, damping is mostly identified from the frequency response function (FRF), including half-power bandwidth method, circle-fitting method, wavelet transform method etc. In frequency domain, some method (e.g. wavelet transform method) has high accuracy, but the algorithm is very complicated, thus it's not widespread in practical [3].

In this work first vibration test is carried out and natural frequencies, response of pump and bracket assembly is obtained. Then various methods to find optimum damping ratio is studied. According to available experimental results best suitable methods are selected and damping ratio for system is evaluated. Vibration analysis of existing bracket is carried using ANSYS to observe correlation of experimental results and simulation results. Some geometric modifications are made and appropriate material for bracket is selected to avoid the failure of bracket. Vibration analysis of modified bracket using ANSYS is carried and results are compared on the basis of accuracy of equivalent stresses on bracket. Input random vibration profile in terms of power spectral density

(PSD) is applied at the bracket fixations. Appropriate boundary conditions are applied. All random vibration analysis is carried using evaluated optimum damping ratio for pump and bracket assembly.

II. EXPERIMENTAL ANALYSIS

Vibration testing is done to introduce a forcing function into a structure, usually with the use of a vibration test shaker or vibration testing machine.

Two pumps along with bracket are placed serially on one plate. This plate is placed on shaker table and bolted. Accelerometers are mounted on three different positions to record the vibration response i.e. each on short and long arm of bracket and one is on pump as shown in figure 1. Excitations are provided at the base in X, Y, and Z directions. Response is recorded with the help of data acquisition system (DAQ).

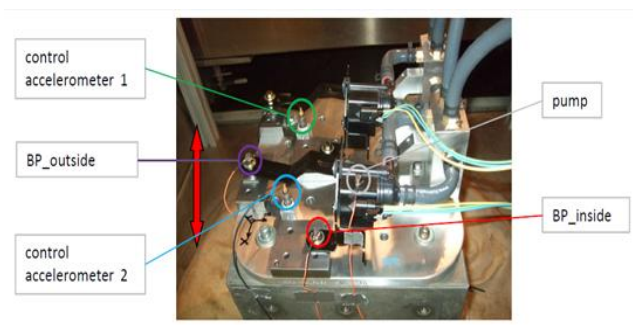

Fig.1. Position of accelerometers

Fig 2. Failure location of bracket

From experimental result it is observed that bracket failed when it is excited in Z direction. Besides that, natural frequencies in X, Y and Z directions are recorded as shown in table no. 1. Frequency responses are also recorded in three directions. One important part is that shake table test gives quality factor value corresponding to each natural frequency automatically which is helpful to find damping ratio value.

III. EVALUATION OF OPTIMUM DAMPING RATIO

As discussed in the introduction chapter various methods are available to find damping ratio. All methods were studied and most suitable methods are applied in this study. These are as follows-

i) Half power bandwidth method
ii) Quality factor method
iii) Rayleigh damping method

Table 1. Natural frequencies and quality factor in X, Y and Z direction

Axis	Natural Frequency(Hz)	Quality Factor
X	84	1.8
	121.7	3.6
	199.8	2.9
	463.1	2.5
	635	2.1
Y	77	4.5
	388	4.2
	72.8	1.8
	84.6	2.5
Z	165.4	2.6
	190.8	8.6

i) Half power bandwidth method-

From the frequency response curve recorded damping ratio is evaluated [4]. It is observed in experiment that bracket failed when it is excited in Z direction. Hence from response of Z direction dominating frequency is considered. Two points on curve equal to X/1.414 are plotted. Where X is maximum amplitude. After projecting those points on frequency axis frequency bandwidth is recorded. Graphical construction is shown in the fig.3.

Having all these values, damping ratio is calculated by

$$\zeta = \frac{\omega_2 - \omega_1}{2\omega_n} \quad (1)$$

Where,

ω_2-ω_1= Frequency bandwidth

ω_n= Natural frequency

ζ= Damping ratio

Putting all values in equation (1) evaluated damping ratio is 5.8% i.e.0.058

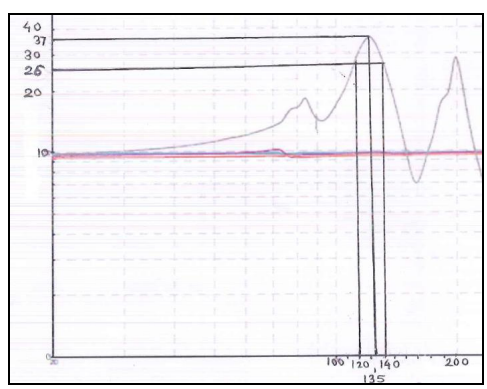

Fig.3. Frequency response in Z direction

ii)Quality factor method

As it is discussed that vibration test gives the quality factor value corresponding to each natural frequency. Using this quality factor value damping ratio is evaluated. Quality factor value corresponding to most dominating frequency is taken for evaluation of damping ratio. Damping ratio is given by

$$\zeta = \frac{1}{2Q} \quad (2)$$

Where,

Q= Quality factor

The quality factor value i.e.8.6 corresponding to natural frequency 190.8 Hz in Z direction is taken into consideration as it is dominant. Evaluated damping ratio by quality factor method is 5.75%

iii) Rayleigh Damping method-

This gives damping ratio in the form of α and β as a multiplier. Rayleigh damping is damping that is proportional to a linear combination of mass and stiffness [6].

Damping ratio is represented as,

$$[C] = \alpha[M] + \beta[K]$$

Where,

[C]= Damping matrix of the physical system

[M]=Mass matrix of physical system

[K]=Stiffness value of system

α=Mass matrix multiplier

β=Stiffness matrix multiplier

100% mass participation factor occurs at first six natural modes. So, first six natural frequencies are found by modal analysis. If range of damping ratio is assumed and substituted in the equation no. 3 and 4, value of α and β is obtained. Value of α and β are constant.

$$\beta = \frac{2}{\left(\omega_j^2 - \omega_i^2\right)}\left(\omega_j \zeta_j - \omega_i \zeta_i\right) \tag{3}$$

$$\alpha + \beta \omega_i^2 = 2\zeta_i \omega_i \tag{4}$$

IV. Random Vibration Analysis

Random vibration analysis is done in ANSYS to examine the response of bracket under applied random vibration profile. CAD model of assembly is called in workbench. Details of each part is shown in the figure no.4.

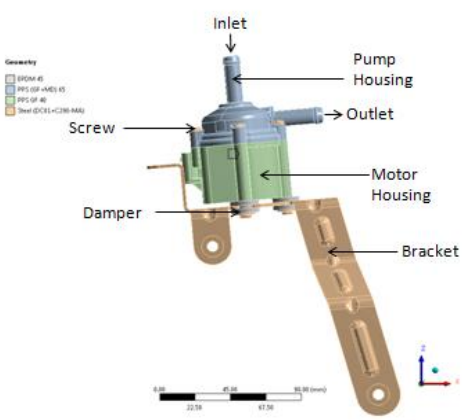

Fig no. 4. FEM model

Material properties are assigned to respective part (Refer table no. 2). Pump consists of some electronic parts which have negligible mass. So the mass of electronic part is treated as point mass and applied at CG of pump. All parts are connected to each other with bonded contact. Modal analysis is done to find natural frequencies. First six natural frequencies are shown in table no.3.

Table 2. Material properties for existing bracket

Component	Material	Material Properties
Dampers	EPDM 45	Young's modulus:1.7 MPa Poisson's ratio:0.48 Density:8.8E-07 kg/ mm^3
Pump Housing	Plastic PPS (GF+MD) 65	Young's modulus:19000 MPa Poisson's ratio:0.42 Density:1.95E-06 kg/ mm^3
Housing	Plastic PPS GF 40	Young's modulus:14400 MPa Poisson's ratio:0.42 Density:1.69E-06 kg/ mm^3
Bracket, Sleeves and Screws	Steel (DC01+C290-MA)	Young's modulus:200000 MPa Poisson's ratio:0.3 Density:7.85E-06 kg/mm^3 UTS:270 MPa Bending fatigue limit:125 MPa

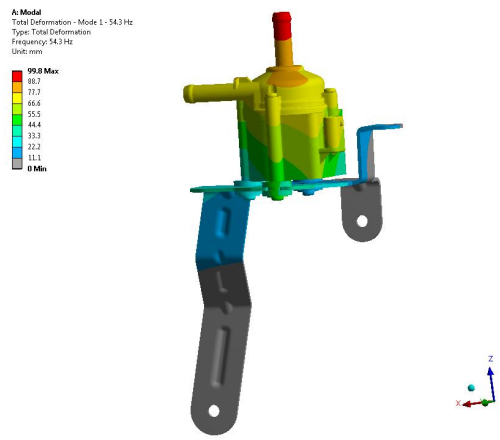

Fig 5. First mode of bracket

Input PSD profile is given and directional deformation and equivalent stress on bracket is evaluated in X, Y, and Z directions with using all evaluated damping ratio.

Table 3. Modal analysis results

Mode	Natural frequency (Hz)
1	54
2	74
3	115
4	182
5	274
6	349

From the stress plot shown in fig. 7 it is observed that bracket failed at applied PSD profile at shorter arm of bracket. Directional deformation and equivalent stress on bracket is recorded with different evaluated damping ratio and results are tabulated in table no.5 and 6 respectively. Fatigue limit for the steel is 125MPa.

Table 4. Input PSD profile

Frequency [Hz]	PSD [$(m/s^2)^2$/Hz]
10	10
100	10
300	0.51
500	20
2000	20

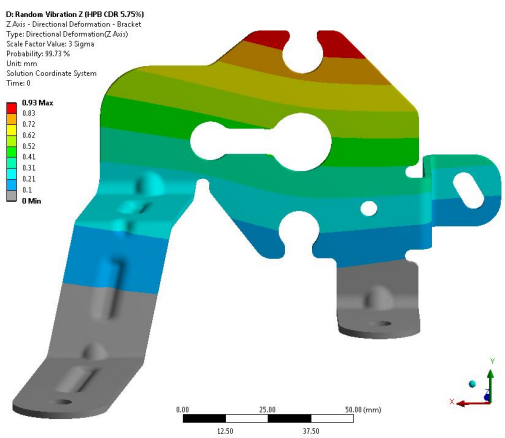

Fig 6. Directional deformation of bracket in Z direction.

Table 5.Directional deformation on existing bracket

Method	Damping ratio [%]	Directional Deformation of Bracket [mm]		
		X	Y	Z
Half Power Bandwidth	5.75	0.45	0.53	0.93
Quality Factor	5.80	0.44	0.53	0.93
Rayleigh Damping	α=0.07926 & β=3.432E-4	0.44	0.53	0.88
Simulation with 6% CDR	6.00	0.44	0.52	0.91

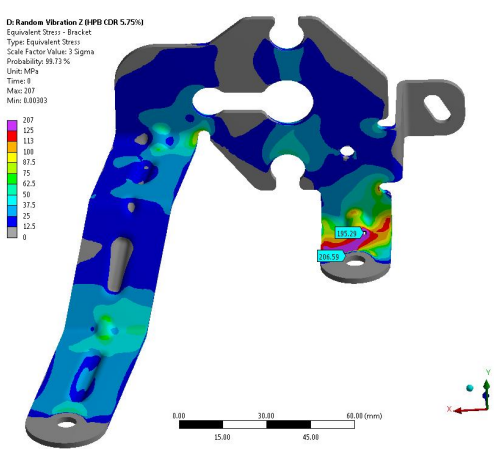

Fig 7. Equivalent stress on bracket in Z direction.

Table 6.Equivalent stress on existing bracket

Method	Damping ratio [%]	Equivalent stress on bracket [MPa]		
		X	Y	Z
Half Power Bandwidth	5.75	203.7	187.8	195.2
Quality Factor	5.80	202.8	187.02	194.4
Rayleigh Damping	α=0.07926 β=3.432E-4	198.83	183.53	187.47
Simulation with 6% CDR	6.00	199.2	183.9	191.2

V. GEOMETRIC MODIFICATION OF BRACKET

On observing the stress locations on bracket it is decided to modify the geometry of existing bracket. As it is known that stiffness should be increased to avoid failure of bracket. Geometric modification is done as shown in the fig.8 and 9.

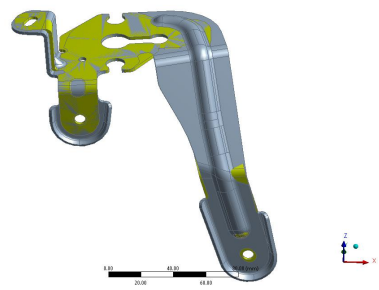

Fig 8.Geometric modifications of existing bracket

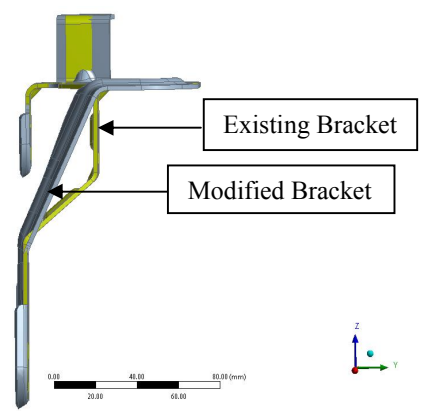

Fig 9. Comparison of existing and modified bracket

After applying same PSD profile to modified bracket followed by random vibration analysis keeping all boundary conditions same as existing bracket, it is observed that bracket failed at same location. Due to packaging space availability and design constraints there was no scope for further geometry modification. Hence it is decided to change the material of bracket having high strength keeping all material of assembly constant. New material for the bracket is shown in the table no.7

Table 7. New material for modified bracket

Component	Material	Material Properties
Bracket, Sleeves and Screws	Steel (S420MC)	Young's modulus:212000 MPa Poisson's ratio:0.3 Density:7.84E-06 kg/mm^3 Yield strength:420 MPa (Min.) Tensile strength Rm: 480-620 MPa Bending fatigue limit(0.46*Rm):222 MPa

Modal analysis and random vibration analysis of modified bracket with new material is carried. It is safe as maximum stress on bracket is well below the assumed bending fatigue limit of new steel material i.e.222MPa. Directional deformation and stress plot is shown in fig no.10 and 11 resp. Directional deformation and equivalent stress on bracket is recorded and tabulated in table no.8 and 9.

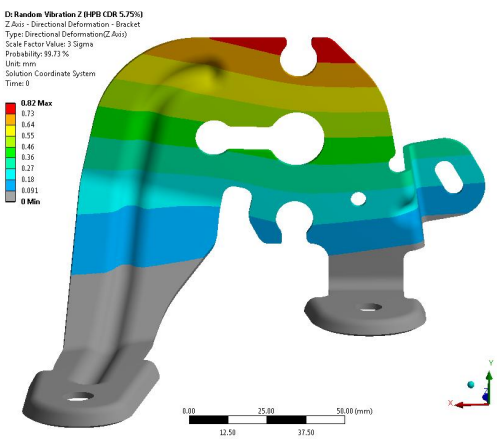

Fig 10. Directional Deformation of modified bracket in Z direction.

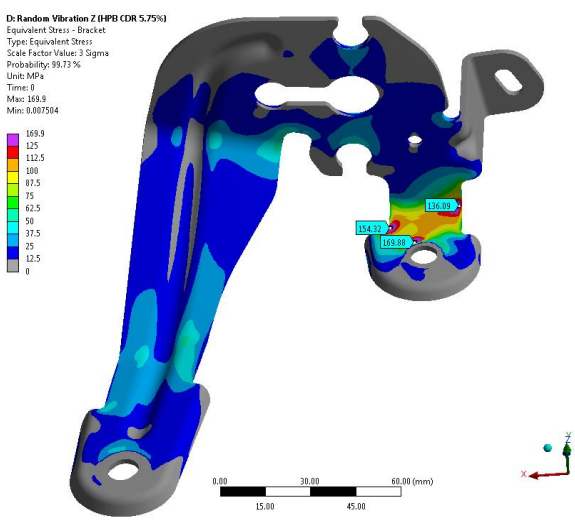

Fig 11. Equivalent stress on modified bracket in Z direction.

Table 8.Directional deformation on modified bracket

Method	Damping ratio [%]	Directional Deformation of Bracket [mm]		
		X	Y	Z
Half Power Bandwidth	5.75	0.39	0.48	0.76
Quality Factor	5.80	0.39	0.49	0.78
Rayleigh Damping	α=0.07926 & β=3.432E-4	0.39	0.49	0.77
Simulation with 6%	6.00	0.37	0.47	0.71

Table 9.Equivalent stress on modified bracket

Method	Damping ratio [%]	Equivalent stress on bracket [MPa]		
		X	Y	Z
Half Power Bandwidth	5.75	165.5	159.4	150.9
Quality Factor	5.80	169.6	162.9	154.0
Rayleigh Damping	α=0.07926 β=3.432E-4	168.7	162.2	153.3
Simulation with 6%	6.00	157.4	152.6	143.56

VI. CONCLUSION

Experimental analysis and Random vibration analysis of existing bracket shows failure during its performance. So, geometric modifications are done into existing bracket by considering the deformation and stress locations. After analysis of modified bracket there is again failure. Due to constraint in packaging space availability it is decided to change the material of bracket having high bending fatigue limit. There is no failure observed from analysis of modified bracket with new material. Directional deformation and equivalent stress results of existing and modified bracket are compared.

It is important to apply correct value of damping ratio in random vibration analysis using ANSYS. Damping ratio is evaluated with different methods. After analysis it is observed that 6% constant damping ratio gives the correct simulation results.

REFERENCES

[1]S. H. Crandall, The role of damping in vibration theory, Journal of sound and vibration (1970) 11 (1), 3-18.

[2]C. Cai, H. Zheng, M.S. Khan and K. C. Hung, Modelling of material damping properties in ANSYS, Defence system division, Institute of high performance computing 89C science park drive, Singapore science park I, Singapore 118261.

[3]Zhiwei Guo,Meiping Sheng, Jiangang Ma,Wulin Zhang, Damping identification in frequency domain using integral method, Journal of Sound and Vibration 338(2015)237–249.

[4]George A. Papagiannopoulos , George D. Hatzigeorgiou, On the use of the half-power bandwidth method to estimate damping in building structures, Soil Dynamics and Earthquake Engineering 31 (2011) 1075–1079.
[5]Jin-Ting Wangn, FengJin,Chu-HanZhang, Estimation error of the half-power bandwidth method in identifying damping for multi-DOF systems, Soil Dynamics and Earthquake Engineering 39 (2012) 138–142.
[6]A. Alipour and F. Zareian, Study of Rayleigh damping in structures; Uncertainties and treatments, 14th World conference on earthquake engineering October 12-17, 2008, Beijing, China.
[7]Jerzy Filipiak, Lech Solarz, Konrad Zubko, Analysis effect on beam vibration, Molecular and quantum acoustics vol. 27, (2006).