Investigation of Vibration Effect on Surface Roughness of PMMA Material

M.R.Dhakad, K.A.Mahajan
Modern Education Society's College of Engineering, Pune

Abstract- PMMA is a very strong and durable material, highly transparent to visible light, with superior light transmission compared to others types of glass. Due totheir good properties, PMMA is one of the most common materials used in optical applications. Since surface quality is considered to be main problem for optical performance, optimum cutting conditions should be checked to get the best surface quality.

In this thesis, the effects of cutting parameters and vibration on product quality are experimentally studied. PMMA specimens are machined by turning machine and the roughness values of the diamond turned surfaces are measured by MSA-500 which works on the principle of White Light Interferometer. A accelerometer is used to gather vibration data by using NI LABVIEW software. Optimum cutting conditions are investigated by three-level full factorial design is obtained to determine the surface roughness by considering feed rate, depth of cut and spindle speed. Also the vibration model is developed to find the correlation between vibration and surface roughness.

***Index Terms*— PMMA, Turning operation, CNC Lathe, Surface Roughness, Vibration**

I. INTRODUCTION

Surface finish is mainly a process to achieve a better surface from a manufactured part. However, increasing demand for very high quality surfaces makes the process a little bit complicated. Although manufacturing process produces surfaces with less than tens of nanometer accuracy, manufactured parts can still have unwanted defects. Lens and mirrors used in optical systems need to have a perfect surface quality to achieve their function but tool marks and other surface defects can considerably decrease optical performance in terms of scattering and distortion. Better optical properties is important selection criteria of parameters for optical parts. However, despite the demand for plastics having high level of surface quality and accuracy are so high, micro-machining of plastics is not very popular. Plastics are widely used in terms of weight and economic considerations. Their low price and low specific gravity makes plastics very attractive for all industrial applications. Metal cutting processes can entail three different types of mechanical vibrations that generated due to the lack of dynamic stiffness of one or several elements of the system composed by the tool holder, the cutting tool and work piece material. These three types of vibrations are called as free vibrations, forced vibrations and self-excited vibrations. Free vibrations occur when the mechanical system is displaced from its equilibrium and vibrate freely. In a metal removal operation, free vibrations it is observed that due to wrong tool path, cutting tool and the work piece gets collided. Forced vibrations appear due to external harmonic excitations. The principal source of forced vibrations in turning processes is when the cutting edge enters and exits the work piece.

A. Poly(methyl methacrylate) or PMMA

Poly(methacrylates) are polymers of the esters of methacrylic acids. It is a clear, colourless polymer available on the market in both pellet and sheet. It is commonly called acrylic glass or simply acrylic or Plexiglas.

Major objective of this study is to

- Optimum machining parameters investigation.
- Investigation of vibration effect on surface roughness.
- Solution for the minimization of vibration effect.
- Prediction of surface texture by Finite element Analysis.

II. LITERATURE SURVEY

M.Y. Ali, A.R. Mohamed, A.A. Khan, B. Asfana, M. Lutfi and M.I. Fahmi[1] has found that the vibration problem occured in micro end milling of of poly methyl methacrylate (PMMA)workpiece is studied by considering the parameters like spindle speed, feed rate and depth of cut. The vibration was measured using accelerometer. The optimum values of all the three parameters are calculated. The analysis revealed that compared to spindle speed, the feed rate and depth of cut have maximum influence on vibration during machining process.

M. Siddhpura, R.Paurobally [2] explained that chatter vibrations are present in almost all cutting operations and they create a problem in achieving desired productivity. Regenerative chatter is the most harmful to any process as it creates excessive vibration between the tool and the workpiece ,which results in a poor surface finish, high-pitch noise and accelerated tool wear due to which machine tool life, reliability and safety of the machining operation get reduced . The objective is to compare different possibilities of chatter stability , chatter detection and chatter control techniques to

find out most suitable techniques and to identify a research scope in this area. Shrikant S. Jachak Vinay R. Pandey [3] tried to evaluate the effect of certain cutting variables on surface roughness in plain turning of medium carbon steel AISI 1055 under cutting condition.The parameters considered are Cutting speed, depth of cut, feed and cutting flow. The workpiece material used is carbon steel AISI1055 and was machined using adhesive bonded tool and with brazed tool and then performance comparision is carried out between them. The experiments are conducted by factorial. The cutting condition of turning parameters was determined by Design of experiment method to find the optimal values of parameters and to analyze the effect of the turning parameters on material.

Dimla D. E. Snr [4] studied the effect of interrupted turning and the cutting forces recorded on-line while measurements of the cutting tool wear forms were made. The data obtained were analysed in the time and frequency domain for cutting tool wear correlation. After analysis data indicated that the spectra energy content closely correlated with the measured tool wear at certain frequencies. Dileep Kumar C, Arun M, Abraham K Varughese [5] carried out the experiments to find the effects of cutting parameters on surface finish turning of Ti-6Al-4V and then it is optimized for better surface finish and high Material Removal Rate (MRR) during turning. Taguchi method and Grey Regressional Analysis (GRA) is used for the optimization. ANOVA is used to find out contribution of each parameter. Four parameters are selected as influencing parameter as cutting speed, feed, depth of cut and nose radius by considering three levels of each parameters. The experiment plan is designed using Taguchi's L9 Orthogonal Array (OA). Minitab statistical software is used for DOE and analysis.

Xu, H., et al [6] has analyzed the dominant factors affecting surface roughness in SPDT. Considering the mechanism of SPDT, the generation of surface roughness is closely related to the material properties of work pieces, especially some material aspects such as anisotropy, impurity, inclusions and microstructures. The conditions of the tool such as the rake angle, the nose radius, the tool cutting edge waviness and the degree of wear exert significant influence on the surface roughness. The cutting process parameters, including the spindle speed and the depth of cut, especially the feed rate, influence the surface roughness as well, and the cutting conditions can be optimized for given materials and work pieces.

III.MATERIAL PROPERTIES OF POLYMETHYL METHACRYALATE AND APPILICATIONS

Polymethyl methacrylates (PMMA) are polymers of the esters of methacrylic acids. Its chemical formula $C_5H_8O_2)_n$. It is a clear, colourless poly-mer available on the market in both pellet and sheet form under the names Plexiglas, Acrylite etc. It is commonly called acrylic glass or simply acrylic. PMMA is produced by free-radical polymerization of methyl-methacrylate in mass or suspension poly merization.

Table I
Mechanical Properties

Properties	Value
Hardness	M 63 - 97
Ultimate Tensile Strength,	47 - 79 Mpa
Elongation at Break	1 - 30 %
Tensile Modulus	2.2 - 3.8 GPa
Flexural Modulus	3 - 3.5 GPa
Tensile Creep Modulus, 1 h	1800 - 2700 MPa
Tensile Creep Modulus, 1000 h	1200 - 1800 MPa

- PMMA has high mechanical strength.
- High Young's modulus and low elongation at break.
- It does not shatter on rupture.
- It is one of the hardest thermoplastics and also a highly scratch resistant.
- It has low moisture and water absorbing capacity, due to which it provides good dimensional stability

Table II
Physical Properties

Properties	Value
Density	1.15 - 1.19 g/cm3
Water Absorption	0.3 – 2 %
Moisture Absorption at Equilibrium	0.3 - 0.33 %
Linear Mould Shrinkage	0.003 - 0.0065 cm/cm
Melt Flow	0.9 – 27 g/10 min

Table III
Thermal and Optical Properties

Properties	Value
Thermal Conductivity	0.19 - 0.24 W/m.K
Specific Heat Capacity	1.46 - 1.47 J/g.°C
Maximum Service Temperature	Air 41 - 103 °C
Melting Point	130°C
Transmission, Visible	80 - 93 %
Refractive Index	1.49 - 1.498

Applications

- PMMA is an economical, versatile general purpose material. It is available in sheet, rod and tube forms, as well as custom profiles.
- Optics- Dust covers for hi-fi equipment, sunglasses, watch glasses, lenses, magnifying.
- Glasses- Vehicles Rear lights, indicators, tachometer covers, warning triangles.

III. DESIGN OF EXPERIMENT

In this study, three-level full factorial design which is one of the screening objective design of experiment methods is performed by considering three parameters as cutting speed(m/min.), depth of cut(mm) and feed rate(mm/rev.). The advantage of implementing three-level factorial design is to reduce the number of runs and study all paired interactions with three factors. In three-level full factorial design, the highest, the lowest and the middle points of these parameter values are used and thus 27 runs are performed.

RSM is applied to the experimental data using statistical software, Minitab-16. We have considered full factorial design of experiments to generate regression equation for further study and conclusion from experiment. We want to try various combinations of these values.

If we have k factors, each run at two levels, there will be 2^k different combinations of the levels. In the present case, k = 3 and 3^3 = 27.

Here's the design matrix again with the rows randomized. Below is the experiments setup with the 3K factorial design.

The S/N ratio for each level of process parameters will be computed based on the S/N analysis. Furthermore, a statistical analysis of variance (ANOVA) and Grey Regression Analysis will be performed for each response individually to see which process parameters are statistically significant. The optimal combination of the process parameters can then be predicted.

Table IV
Design parameters and variables

Variable	Level 1	Level 2	Level 3
Cutting speed	147	157	167
Feed Rate	0.05	0.06	0.07
Depth of Cut	0.08	0.09	0.1

Table V
Design of Experiments

Run Order	Cutting speed	Feed rate	Depth of cut
1	147	0.05	0.08
2	147	0.05	0.09
3	147	0.05	0.1
4	147	0.06	0.08
5	147	0.06	0.09
6	147	0.06	0.1
7	147	0.07	0.08
8	147	0.07	0.09
9	147	0.07	0.1
10	157	0.06	0.08
11	157	0.06	0.09
12	157	0.06	0.1
13	157	0.05	0.08
14	157	0.05	0.09
15	157	0.05	0.1
16	157	0.07	0.08
17	157	0.07	0.09
18	157	0.07	0.1
19	167	0.05	0.08
20	167	0.05	0.09
21	167	0.05	0.1
22	167	0.06	0.08
23	167	0.06	0.09
24	167	0.06	0.1
25	167	0.07	0.08
26	167	0.07	0.09
27	167	0.07	0.1

IV. EXPERIMENTAL SET UP

The instruments required to perform the experiment are CNC lathe machine, cutting tools, accelerometer to measure the vibration. Machines vibrations produced during the actual experimentation will be measured by using the NI LABVIEW software. The experimental set up is as shown in fig.1.

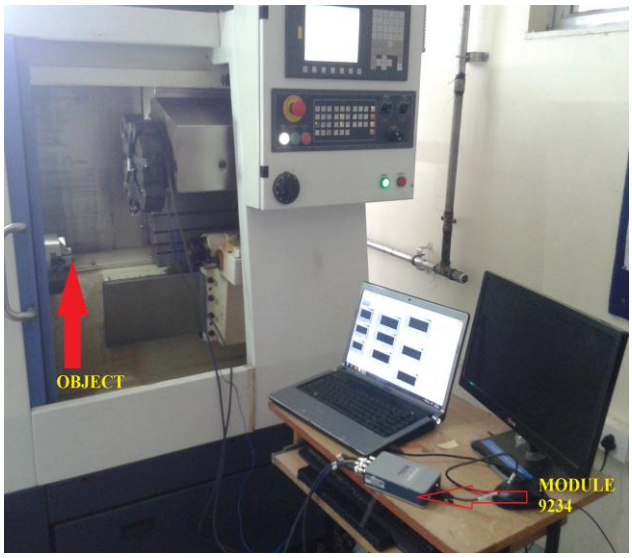

Fig.1 Experimental Set up

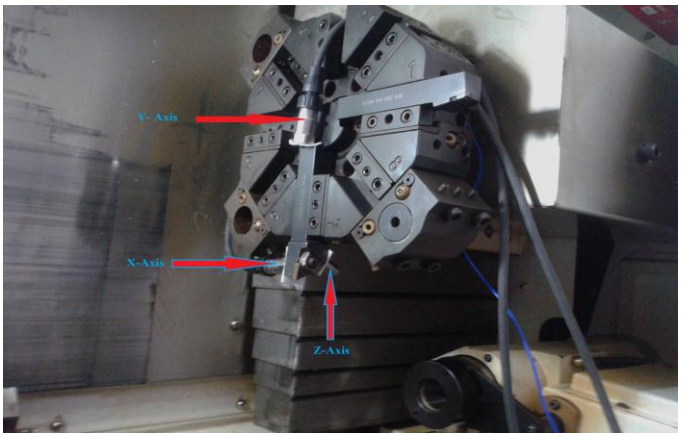

Fig. 2 Mounting of accelerometer on tool holder

The carbide tool is used for performing the operations. This NI system consists of some hardware parts which are attached between the vibrating system and and the PC or Laptop loaded with a software. Accelerometers are mounted on the tool holder are as shown in fig.2.

Vibration Analyser is an electronic device that processes and analyses the signals received from the transducers used in the vibration measurement like impact hammer, digital tachometer etc. I used the module 9234. It has number of channels i.e . it receives a number of signals simultaneously. Four channel vibration analyser is quite common. It has very sophisticated circuit and works together with a computer. FFT is an algorithm frequently used for analysis of the electric signals which provide frequency components and their corresponding amplitudes present in the signals.

Fig.3 Vibration Analyser

It is required to do module of experimental flow process and results chart in NI LABVIEW . The coding of the module is done here which is as shown in fig.4

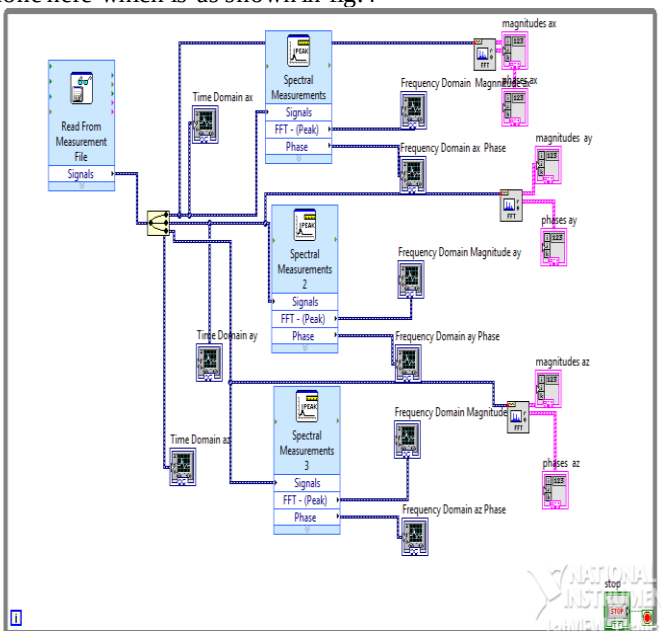

Fig. 4 Module of experiment in NI Lab VIEW

The surface roughness can be measured by using the Talysurf-210 of Mitutoyo. The Takysrf is as shown in fig.5

Fig. 5 Mitutoyo talysurf-210 for measuring surface finish

V. CONCLUSION

1. Effect of various parameters on vibration and surface roughness is studied for different materials. The factors responsible for the vibration generation in the machine are evaluated.
2. The application area of Poly metyl methacrylate is found out to undersatand requirement of material surface roughness. It helped to decide the design parameters and their values.
3. To carry out the experiments in NI LABVIEW software, module is generated to obtain the graph and results.
4. Design of experiments are laid down with the help of Minitab software

VI. FURTHER SCOPE

- Conduct experiments as per DOE and identify to vibration and surface roughness values.
- The obtained results can be verified and analysed in ANOVA and GRA to get the optimised value.
- For the optimised values we can also look for some external attachment to reduce the vibration level at minimum possible level.

REFERENCES

[1] M.Y. Ali, A.R. Mohamed, A.A. Khan, B. Asfana, M. Lutfi and M.I. Fahmi "Empirical Modelling of Vibration in Micro End Milling of PMMA" World Applied Sciences Journal 21 (Mathematical Applications in Engineering): 73-78, 2013

[2] M. Siddhpura, R.Paurobally "Review of chatter vibration research in turning", International Journal of Machine Tools & Manufacture 61 (2012) 27–47

[3] Shrikant S. Jachak, Vinay R. Pandey, "Optimization of CNC Turning Process Parameters for Prediction of Surface Roughness by Factorial Experimentation", Shrikant S. Jachak, Vinay R. Pandey, "Optimization of CNC Turning Process Parameters for Prediction of Surface Roughness by Factorial Experimentation", INTERNATIONAL JOURNAL OF INNOVATIVE RESEARCH & DEVELOPMENT, March, 2014 ,Vol 3 ,Issue 3

[4] Dimla D. E. Snr., "The correlation of vibration signal features to cutting tool wear in a metal turning operation", International Journal of Advanced Manufacturing, 2000, 19(10), 705-713.

[5] Dileep Kumar C, Arun M, Abraham K Varughese" Study of Effect of Tool Nose radius on Surface Finish and Optimization of Machining Parameters of Turning Process of an Aerospace Material", AIJRSTEM 14-593,2014

[6] Xu, H., et al., "Study on the control of surface roughness in single point diamond turning", p. 84161D-84161D, 2012.

[7] Riedl, M., "Advances in single-point diamond turning provide improved performance for visible as well as ir optics". SPIE's OE-magaz Carr, J.W. and C. Feger, "Ultraprecision machining of polymers", Precision Engineering, p. 221-237, 1993ine, 2004

[8] Carr, J.W. and C. Feger, "Ultraprecision machining of polymers", Precision Engineering, p. 221-237, 1993

[9] Jin Li Wang et al., 2011, "Advanced Materials Research", 189-193, 3187.

[10] Abuthakeer, S.S., P.V. Mohanram, and G. Mohankumar, "The Effect of Spindle Vibration on Surface Roughness of Workspiece in Dry Turning Using Ann", International Journal of Lean Thinking, 2011. 2(2): p. 42-58.

[11] Kopač, J. and S. Šali, "Tool wear monitoring during the turning process", Journal of Materials Processing Technology, p. 312-316, 2001

[12] Jasinevicius, R.G., et al., "Critical aspects on the behavior of material from the mechanical tool-workpiece interaction in single point diamond turning", Journal of the Brazilian Society of Mechanical Sciences, p. 509-518, 1999.

[13] W. B. Lee, C. F. Cheung et al., "Materials Induced Vibration in Ultra-Precision Machining", J. of Materials Processing Technology, 89-90, pp. 318-325, 1999

[14] Chen, C.-C. and K.-T. Chiang, "Analyzing the design of vibration reduction with the rubber-layered laminates in the precision turning with a diamond cutting tool", The International Journal of Advanced Manufacturing Technology, 2011. 57(1-4): p. 101-116.