Design and Optimization of Propeller Shaft Made Up of Composite Material

Swapnil Shinde, RMD Sinhgad School of Engineering, Pune

Abstract: Automotive propeller shaft is a very important component of vehicle. It is used for power transmission from gear box to differential. Conventional steel propeller shafts are usually manufactured in two pieces to increase the fundamental bending natural frequency. But the two-piece steel driveshaft involves three universal joints, an intermediary thrust bearing and a supporting bracket in its assemblage, which increases the total weight of the vehicle. The overall objective of this work is to design and analyze a composite drive shaft for power transmission. Substituting composite structures for conventional metallic structures has many advantages because of higher specific stiffness and strength of composite materials. This work deals with the design of propeller shaft for "MAHINDRA LOAD KING" considering the torque capacity, shear stress & critical rpm requirement. In this work Kevlar/Epoxy and aluminum reinforcement is used as composite material for replacement of conventional two-piece steel propeller shafts. The design parameters were optimized with the objective of minimizing the weight of composite drive shaft.

Index Terms—Composite Shaft, Kevlar-epoxy, Propeller Shaft

I. INTRODUCTION

THE advanced composite materials such as Graphite, Carbon, Kevlar and Glass with suitable resins is widely used because of their high specific strength (strength/density) and high specific modulus (modulus/density). Advanced composite materials seem ideally suited for long, propeller shaft applications. Their elastic properties can be tailored to increase the torque they can carry as well as the rotational speed at which they operate. Drive shafts are used in automotive, aircraft and aerospace applications. The automotive industry is exploring composite material technology for structural components construction in order to obtain the reduction of the weight without decrease in vehicle quality and reliability. It is known that energy conservation is one of the most important objectives in vehicle design and reduction of weight is one of the most effective measures to obtain this result. Actually, there is almost a direct proportionality between the weight of a vehicle and its fuel consumption, particularly in city driving. The combustion of fossil fuels such as gasoline and diesel to transport people and goods is the fourth largest source of CO2 emissions, accounting for about 12.9 % of total CO_2 emissions in India according to study published in 2008. CO_2 emission by human activities is one of the major reasons for excessive greenhouse gases in earth's environment, which is causing global warming. To reduce CO_2 emission due to transportation our focus should be on increasing fuel efficiency of the vehicle used for transportation. One of the ways of achieving it is reducing the weight of the vehicle.

Our focus will be on reducing the weight of the propeller shaft by finding alternative light weight material for it which will contribute in reduction of weight of the vehicle eventually.

II. LITERATURE REVIEW

Mr. R. P. Kumar Rompicharla, Dr. K. Rambabu designed and analyzed a composite drive shaft for power transmission substituting composite structures for conventional metallic structures in their research, "Design and Optimization of Drive Shaft with Composite Materials". The design optimization shows significant potential improvement in the performance of drive shaft. In this study, they reached to the conclusion through their results that, the usage of composite material has resulted to inconsiderable amount of weight saving in the range of 28 % when compared to conventional steel shaft. Taking into considerations the weight saving, deformation, shear stress induced and resonant frequencies it was evident that Kevlar/Epoxy composite has the most encouraging properties to act as replacement for steel out of the considered two materials. [1]

Bhushan K. Suryawanshi, Prajitsen G. Damle, developed a new manufacturing method, in which a carbon fiber epoxy composite layer was co-cured on the inner surface of an aluminum tube rather than wrapping on the outer surface to prevent the composite layer from being damaged by external impact and absorption of moisture. Replacing composite structures with conventional metallic structures has many advantages because of higher specific stiffness and higher specific strength of composite materials. By considering the thermal residual stresses of the interface between the aluminum tube and the composite layer, the optimum stacking sequence is calculated with the help of finite element analysis. Press fitting method for the joining of the aluminum/composite tube and steel yokes was devised to improve reliability and to reduce manufacturing cost, compared to other joining methods such as adhesively bonded, bolted or riveted and welded joints. The joining of the aluminum - composite tube and steel yoke with improved reliability and optimum manufacturing cost is done by press fitting. In order to increase the torque transmission capacity protrusion shape is provided on the inner surface of steel yoke which will fit on Universal joints. [2]

Harshal Bankar, Viraj Shinde, P. Baskar proved the use of composite material in reducing the weight of shaft significantly as the composite has lower density in their work. The initial torque required to give rotation to the transmission system is large, as the weight reduces this surplus torque is utilized to propel the vehicle, at the same time inertial effect of rotating part decreases. Also the reduction in the weight of shaft increases the 1st modal frequency of bending; hence this

shaft can be utilized for higher frequencies than steel. The reduction in weight gives further advantage in the increase in fuel economy of vehicle. The stress distribution and the maximum deformation in the shaft are the functions of the stacking of material. The optimum stacking of material layers can be used as the effective tool to reduce weight and stress acting on the drive shaft. The design of drive shaft is critical as it is subjected to combined loads. The designer has two options for designing the drive shaft whether to select solid or hollow shaft. The solid shaft gives a maximum value of torque transmission but at same time due to increase in weight of shaft the 1st mode frequency decreases. Also shaft outer surface facing most of the stress coming on to it and the inner material layer experienced less stress, hence the inner layers increasing the weight of shaft and not utilized for stress distribution properly, that's why the hollow drive shaft is best option. [3]

M. R. Khoshravan, A. Paykan presented design method and a vibration analysis of a carbon/epoxy composite drive shaft. The design of the composite drive shaft was divided into two main sections: First, the design of the composite shaft and second, the design of its coupling. Some parameters such as critical speed, static torque, fiber orientation and adhesive joints were studied. Tsai-Hill failure criterion was implemented to control the rupture resistance of the composite shaft and then its critical speed analysis and modal analysis were carried out using ANSYS. The behavior of materials is considered nonlinear isotropic for adhesive, linear isotropic for metal and orthotropic for composite shaft. The substitution of composite driveshaft has resulted in considerable weight reduction about 72% compared to conventional steel shaft. Experimental results revealed that the orientation of fibers had great influence on the dynamic characteristics of the composite shaft. Composites have high specific modulus, high strength and less weight. The fundamental natural frequency of carbon fiber drive shaft can be twice as that of the steel or aluminum, because the carbon fiber composite material has more than 4 times the specific stiffness, which makes it possible to manufacture the drive shaft of passenger cars in one piece. A one piece composite shaft can be manufactured so as to satisfy the vibration requirements. This eliminates all the assembly, connecting the two piece steel shaft and thus minimizes the overall weight, vibrations and cost. Due to weight reduction fuel consumption will be reduced. They have high damping capacity and hence they produce less vibrations and noise. They have good corrosion resistance, greater torque capacity, longer fatigue life than steel and aluminum. [4]

III. PROBLEM STATEMENT

Vehicle weight reduction saves energy, minimizes brake and tire wear and cuts down emissions. Weight reduction of vehicles is directly linked to lower CO_2 emissions and improved fuel economy. The benefits of even modest vehicle weight reduction are significant. Replacing steel drive shaft of vehicle with composite drive shaft will help reducing weight of vehicle. The vehicle for which we are designing the propeller shaft is "**Mahindra Load King".**

A. NOMENCLATURE USED IN THE PAPER:

D_o – Outer Diameter of hollow steel shaft
D_i – Inner diameter of hollow steel shaft
E – Modulus of Elasticity
S_{yt} – Yield strength of the material selected for steel shaft
S_{sy}- Maximum shear stress allowed in the shaft design
T_e – Maximum Engine Torque
R – Highest gear ratio achievable from the transmission system
M_t – Maximum Dynamic Torque acting on the shaft
K_t – Shock and fatigue loading factor
C – Ratio of Di with Do
t – Thickness of the shaft
L – Length of the shaft
V – Volume of the shaft
ρ – Density of the shaft material
m – Mass of the shaft
T_{al}–Torque transmitted by aluminum
T_{co}–Torque transmitted by composite

IV. THEORETICAL ANALYSIS

A. DESIGN OF CONVENTIONAL STEEL SHAFT:

Automotive shafts are manufactured by forging process. This means that the propeller shaft meets its rated strength and has required ductility and fatigue properties. The reliability and consistency in the properties of the shaft is required because of the nature of the application.

Propeller shafts are designed on the basis of torsional loading. The commonly used materials for manufacturing the propeller shaft is low carbon steel with 10-18 % Chromium and 5-8 % Nickel. The strength of the material used for manufacturing propeller shaft is:

$$\text{Yield Strength } (S_{yt}) = 370 \text{ N/mm}^2$$

TABLE I
MECHANICAL PROPERTIES OF STEEL

Mechanical Properties	Symbol	Units	Steel
Young's Modulus	E	GPa	210
Shear Modulus	G	Gpa	80
Poisson's Ratio	M	-	0.3
Density	P	Kg/m^3	7860
Yield Strength	Sy	MPa	370

As per ASME code for design of shaft, the shear strength for the shaft or the maximum allowable shear stress is given by the following equation:

$$\text{Shear Strength (Ssy)} = 0.3 \text{ Syt}$$
$$\text{Ssy} = 0.3 \times 370 \text{ N/mm}^2$$

$$\mathbf{Ssy = 111 \text{ N/mm}^2}$$

Therefore, the maximum allowable shear stress on the propeller shaft is = 111 N/mm^2

Due to the packaging and geometric constraints in the vehicle, the length of the propeller shaft is,

L = 1426 mm

Load on the shaft is,

Mt = 1260 N-m

Equivalent Torsional moment,

Design of Experiments is performed to find out optimum shaft design using Taguchi matrix. Value of C is changed from 0.8 to 0.99 in the steps of 0.01 to select most suitable design from the table.

As the Taguchi matrix clearly indicates ratio of diameters for hollow shaft C is inversely proportional to total mass of the shaft for the given application. Higher the value of C, thinner is the shaft and lesser is the weight, so maximum possible outer diameter shaft should be selected to achieve lightest design of shaft but below are few more parameters governing selection of the optimum value of C

- Due to limited space available below vehicle, there are packaging constraints. Maximum outer diameter allowed for the shaft is 75 mm in case of Mahindra load king.
- Thickness of the shaft should withstand the forces at the time of assembly when it is forced in to the universal coupling without losing its shape.
- Standard shaft of 50-100 mm range are available at the different sizes in steps of 2mm.

After considering all the above mentioned points, the value of C is selected as 0.91. This gives us the outer diameter (Do) of the shaft as 72 mm and thickness of the shaft as 3.22 mm. These are the closest to the standard sizes available in the market within the limit of space constraints provided for packaging the shaft inside the vehicle transmission system.

Thickness of the shaft is also good enough to withstand forces applied on the shaft while press fitting with universal coupling. Therefore the final dimensions of the conventional steel shaft are:

Do = 72 mm
t = 3.22 mm
C = 0.91

Now, we will cross check the selected dimensions for torque transmission in the equation of torsion,

$$\tau = \frac{2 \times 16.M_t}{\pi {d_o}^3 (1 - c^4)}$$

$$\tau = 109.42\ N/mm^2$$

The maximum shear stress is 109.42 N/mm^2, which is within the acceptable limit. Therefore the design of the shaft is safe.

a. Torsional Buckling Capacity Of Conventional Steel Shaft:

As the shaft is designed based on static torque capacity, we need to calculate the buckling torque to verify shaft is safe under buckling with current torque following equation gives us value of torsional buckling capacity of shaft,

$$T_{buckling} = \frac{\pi \times \sqrt{2} \times E}{3 \times (1 - \vartheta^2)^{0.75}} \times \sqrt{(ravg \times t^5)}$$

$T_{buckling}$ = 35862.13 Nm

b. Torsional Rigidity Of Conventional Steel Shaft:

Torsional rigidity is important factor when designing shaft for automotive. Angle of twist permissible is the acceptance criteria while designing the shaft on the basis of torsional rigidity. In camshafts maximum permissible angle of twist of shaft is not to exceed the value of 0.25 degree per meter. In applications like transmission it should be in between 2.5 to 3 degree per meter, depending on the criticality of the application.

We know from the torsion equation we can find angle of twist for the shaft using following equation

$$\frac{G \times \theta}{L} = \frac{T}{J}$$

$$= \frac{72\ E\ 3 \times \theta}{1426} = \frac{1260000}{8.29E05}$$

$$\theta = 1.72\,°$$

c. First Natural Frequency Of Conventional Steel Shaft:

All rotating shaft, even in the absence of external load, deflect during rotation. The combined weight of a shaft and wheel can cause deflection that will create resonant vibration at certain speeds, known as Critical Speed. The magnitude of deflection depends upon the following:

- stiffness of the shaft and it's support
- total mass of shaft and attached parts
- unbalance of the mass with respect to the axis of rotation
- the amount of damping in the system

In general, the Rayleigh-Ritz equation overestimates and the Dunkerley equation underestimate the natural frequency.

$$Ns = \frac{30}{\pi} \times \sqrt{\frac{g}{\delta st}}$$

N_s = 16494.65rpm

$$f1 = \frac{Ns}{60}$$

f1 = 274.92 Hz

B. Design Of Composite Shaft:

The aluminum/composite drive shaft should satisfy the design specifications such as static torque capability. The major role of the aluminum tube is to sustain an applied torque while the role of the carbon fiber epoxy composite is to increase bending strength. The torque transmitted by the hybrid drive shaft, T_{emax} is the sum of the torque transmitted by the aluminum tube T_{al} and that by the composite layer, $T_{co,}$

$$T_{emax} = T_{al} + T_{co}$$

Considering geometric compatibility and material properties of each material, the torque transmitted by the aluminum tube is calculated as follows:

$$T_{al} = \frac{G_{al} \times J_{al}}{G_{al} \times J_{al} + G_{co}J_{co}} \times Temax$$

TABLE II
MECHANICAL PROPERTIES OF ALUMINIUM

Mechanical Properties	Symbol	Units	Aluminium
Young's Modulus	E	GPa	72
Shear Modulus	G	Gpa	27
Poisson's Ratio	μ	-	0.33
Density	ρ	Kg/m^3	2700
Yield Strength	Sy	MPa	270
Shear Strength	Ss	Mpa	200

Design based on Static Torque we get,

$$\tau_{max} = \frac{16.m_t}{\pi {d_o}^3(1-c^4)}$$

$$\tau_{max} = Ssal$$

For designing aluminium shaft we will select outer diameter of the shaft as 72 mm and thickness of the shaft as 2 mm.

Calculating the value of τ_{max} for the design selected in the equation of shear stress we get,

$$\tau_{max} = \frac{16.m_t.Kt}{\pi {d_o}^3(1-c^4)}$$

$$\tau_{max} = \frac{16 \times 126000 \times 2}{\pi \times 72^3(1-0.944^4)}$$

$$\tau_{max} = 168.24 \text{ MPa}$$

$$T_{Tbuckling} = \frac{\pi \times \sqrt{2} \times Eal}{3 \times (1-\vartheta al^2)^{0.75}} \times \sqrt{(ravg \times tal^5)}$$

$$T_{buckling} = 3830.047 \text{ Nm}$$

TABLE III
PROPERTIES OF KEVLAR/EPOXY COMPOSITE MATERIAL

Mechanical Properties	Symbol	Units	Kevlar/Epoxy
Young's Modulus in X direction	E11	GPa	95.71e9
Young's Modulus in Y direction	E23	GPa	10.45e9
Young's Modulus in X direction	E31	GPa	10.45e9
Shear Modulus in all directions	G	Gpa	80
Poisson's Ratio XY	μ	-	0.34
Poisson's Ratio YZ	μ	-	0.37
Poisson's Ratio XZ	μ	-	0.34
Density	ρ	Kg/m^3	1402
Yield Strength	Sy	Mpa	368

Table No 4 Taguchi matrix for design of exp of Con Shaft.

Modulus of elasticity (Mpa)	Yeild Stregth (Mpa)	Shear Stress Allowed (Mpa)	Engine Torque (Max) (N-mm)	Gear Ratio max	Maximum Dynamic Torque on Shaft(N-mm)	Fatigue and Impact Loading Factor	Hollow shaft constant (Di/Do)	Outer Dia (mm)	Inner Dia (mm)	Thickness of shaft (t)	Length of shaft (mm)	v (Volume of shaft) (mm^3)	Density (kg/mm^3)	Mass (Kg)
E	Syt	Ssy	Te (max)	R	Mt	Kt	C	Do	Di	t	L	V	ρ	m
210000	368	111	2.05E+05	6.14	1.26E+06	2	0.80	58.05	46.44	5.81	1426.00	1.36E+06	7.86E-06	10.68
210000	369	111	2.05E+05	6.14	1.26E+06	2	0.81	58.75	47.59	5.58	1426.00	1.33E+06	7.86E-06	10.45
210000	370	111	2.05E+05	6.14	1.26E+06	2	0.82	59.52	48.80	5.36	1426.00	1.30E+06	7.86E-06	10.22
210000	370	111	2.05E+05	6.14	1.26E+06	2	0.83	60.35	50.09	5.13	1426.00	1.27E+06	7.86E-06	9.98
210000	370	111	2.05E+05	6.14	1.26E+06	2	0.84	61.27	51.47	4.90	1426.00	1.24E+06	7.86E-06	9.73
210000	370	111	2.05E+05	6.14	1.26E+06	2	0.85	62.29	52.94	4.67	1426.00	1.21E+06	7.86E-06	9.48
210000	370	111	2.05E+05	6.14	1.26E+06	2	0.86	63.41	54.53	4.44	1426.00	1.17E+06	7.86E-06	9.22
210000	370	111	2.05E+05	6.14	1.26E+06	2	0.87	64.67	56.26	4.20	1426.00	1.14E+06	7.86E-06	8.95
210000	370	111	2.05E+05	6.14	1.26E+06	2	0.88	66.08	58.15	3.96	1426.00	1.10E+06	7.86E-06	8.67
210000	370	111	2.05E+05	6.14	1.26E+06	2	0.89	67.68	60.24	3.72	1426.00	1.07E+06	7.86E-06	8.38
210000	370	111	2.05E+05	6.14	1.26E+06	2	0.90	69.51	62.56	3.48	1426.00	1.03E+06	7.86E-06	8.08
210000	370	111	2.05E+05	6.14	1.26E+06	2	0.91	71.63	65.19	3.22	1426.00	9.88E+05	7.86E-06	7.76
210000	370	111	2.05E+05	6.14	1.26E+06	2	0.92	74.12	68.19	2.96	1426.00	9.45E+05	7.86E-06	7.43
210000	370	111	2.05E+05	6.14	1.26E+06	2	0.93	77.11	71.71	2.70	1426.00	9.00E+05	7.86E-06	7.07
210000	370	111	2.05E+05	6.14	1.26E+06	2	0.94	80.76	75.92	2.42	1426.00	8.50E+05	7.86E-06	6.68
210000	370	111	2.05E+05	6.14	1.26E+06	2	0.95	85.39	81.12	2.13	1426.00	7.96E+05	7.86E-06	6.26
210000	370	111	2.05E+05	6.14	1.26E+06	2	0.96	91.53	87.86	1.83	1426.00	7.36E+05	7.86E-06	5.78
210000	370	111	2.05E+05	6.14	1.26E+06	2	0.97	100.23	97.22	1.50	1426.00	6.65E+05	7.86E-06	5.23
210000	370	111	2.05E+05	6.14	1.26E+06	2	0.98	114.16	111.88	1.14	1426.00	5.78E+05	7.86E-06	4.54
210000	370	111	2.05E+05	6.14	1.26E+06	2	0.99	143.12	141.68	0.72	1426.00	4.56E+05	7.86E-06	3.59

V. FINITE ELEMENT ANALYSIS

A. Results Of Conventional Steel Shaft:

Three dimensional solid models for the propeller shaft assembly is modelled using CATIA V5. Figure below shows the image from the assembly. Propeller shaft is modeled with an angle of inclination of 25° as per the worst case scenario selected in design chapter before. Shaft is applied with maximum dynamic loading of 1258.7 N-m Torque, after multiplying with shock and fatigue factor for medium duty loading variations we will get static equivalent torque to be applied on the shaft while performing static analysis as:

$$Teqv = Mt \times Kt$$

$$Teqv = 1258.7 \times 2$$

$$Teqv = 2517.4 \text{ N-m}$$

$$Teqv = 2517.4 \times 10^3 \text{ N-m}$$

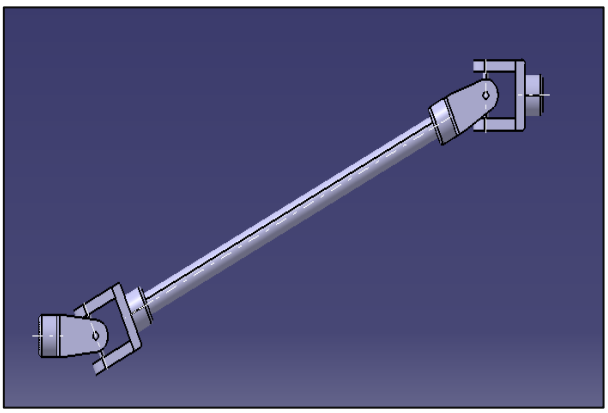

Fig.1. CAD model for Propeller Shaft Assembly

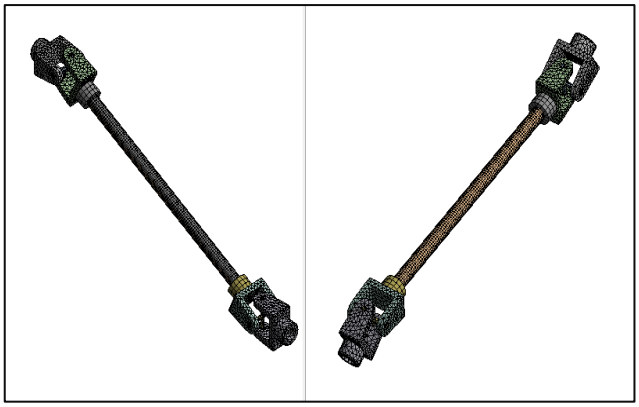

Fig.2. Meshed Model for Propeller shaft assembly with 25 mm Mesh Size

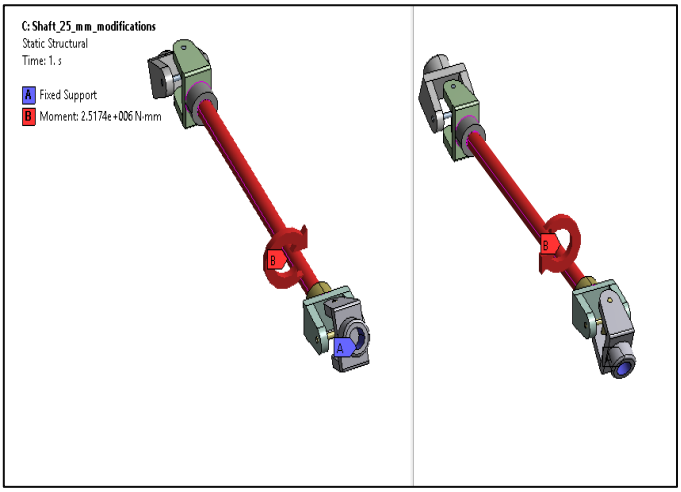

Fig.3. Boundary conditions and Loading applied to shaft

Both universal couplings are assumed to have fixed constrains on the opposite end of the propeller shaft connection as shown in the Figure 3.10. Also static equivalent torque will be applied on the shaft around the shaft axis to simulate the maximum stresses induced in the shaft.

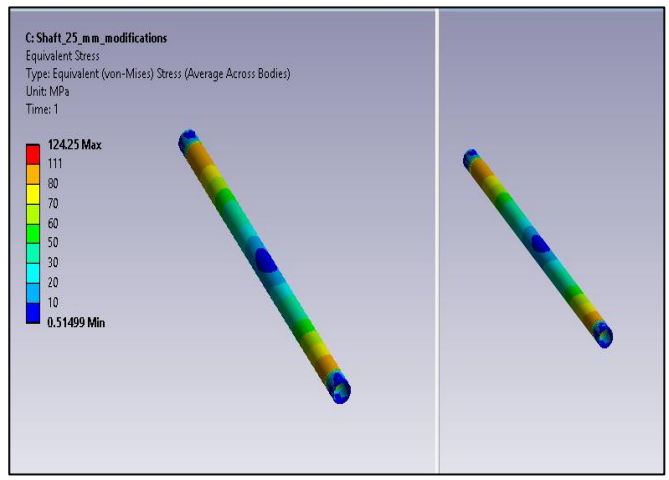

Fig.4. von Mises Stress Plot (MPa) for conventional steel shaft

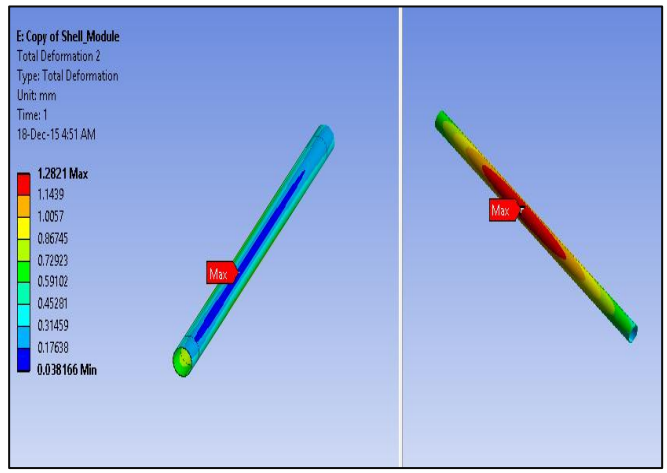

Fig.5. Total Deformation of shaft Plot (4 mm mesh size)

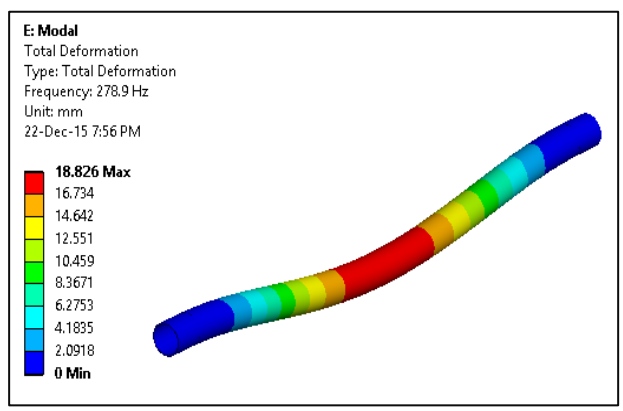

Fig.6. Mode shape plot for first natural frequency of the shaft 278.9 Hz

B. Modal Analysis of Aluminium Shaft:

We have modelled aluminum and composite portion of the shaft as shell from the previous experience of analysis of conventional shaft and also following image shows the layers used to form Kevlar epoxy 4 mm thickness (using 8 layers of 0.5 mm)

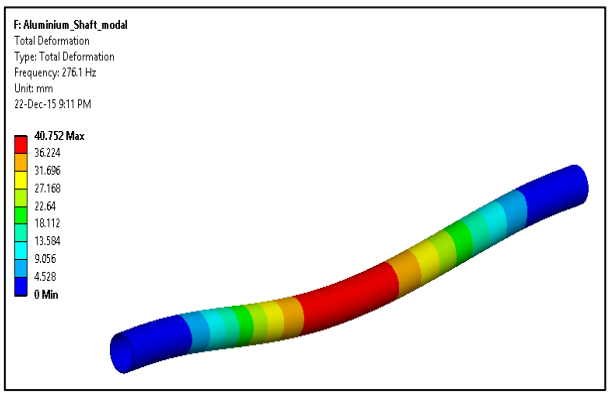

Fig.7. Mode shape plot for first natural frequency of aluminum shaft 276.1 Hz

Natural Frequency is in conformance with the analytical results i.e. 274.66.

C. Results for Composite Shaft:

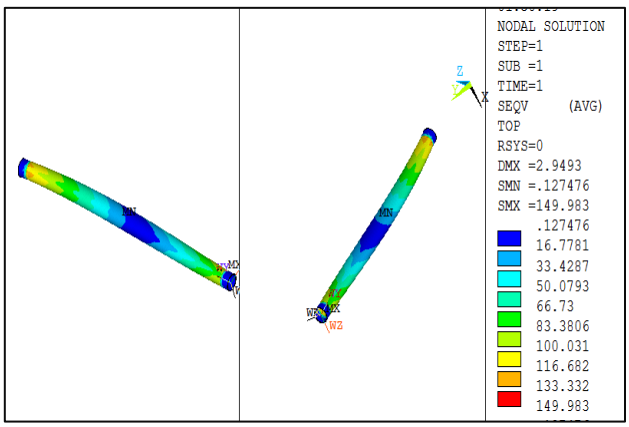

Fig.8. von Mises Stress Plot (Mpa)

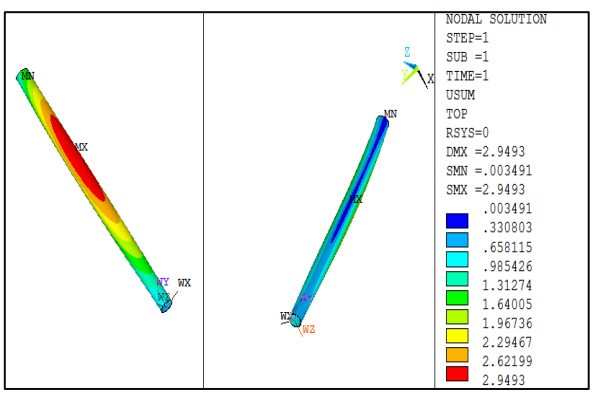

Fig.9. Total Deformation Plot (mm)

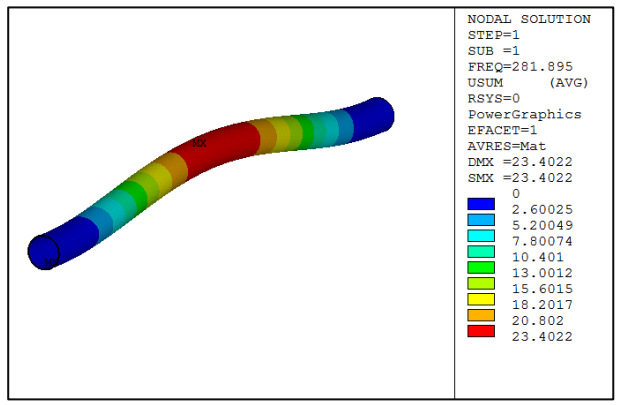

Fig.10. Mode shape Plot for First Natural Frequency of Composite shaft

VI. EXPERIMENTAL VERIFICATION

A. Torsion Test Setup

Generally, torsion occurs when the twisting moment or torque is applied to a member according to figure 36, the torque is the product of tangential force multiplied by the radial distance from the twisting axis and the tangent, measured in a unit of Nm. In torsion testing, the relationship between torque and degree of rotation is graphically presented and parameters such as ultimate torsional shearing strength (modulus of rupture), shear strength at proportional limit and shear modulus (modulus of rigidity) are generally investigated. Moreover, fracture surfaces of specimens tested under torsion can be used to determine the characteristics of the materials whether it would fail in a brittle or a ductile manner.

In order to study the response of materials under a torsional force, the torsion test is performed by mounting the specimen onto a torsion testing machine as shown in figure 36 and then applying the twisting moment till failure. The torque and degree of rotation are measured and plotted as shown in figure. It can be seen that higher torsional force is required at the higher degrees of rotation. Normally, the test specimens used are of a cylindrical rod type since the stress distribution across the section of the rod is the simplest geometry, which is easy for the calculation of the stresses. Both ends of the cylindrical specimen are tightened to hexagonal sockets in which one is fitted to a torque shaft and another is fitted to an input shaft. The twisting moment is applied by turning the input hand wheel to produce the required torque.

"Fig. X Torsion testing machine"

B. Test Results:

TABLE IV
TORQUE APPLIED AND ANGLE OF TWIST

Applied Torque (N-m)	Angle of twist (Degrees)
1471.5	0.18
1500.93	0.21
1530.36	0.22
1559.79	0.25
1589.22	0.27
1618.65	0.32
1657.89	0.38

From the result table, we have proved that the torque transmitting capacity of the composite shaft exceeds the required torque transmitting capacity. Thus the design is safe and the composite shaft can be successfully applied for the application.

VII. RESULTS AND DISCUSSION

- Suitable conventional shaft designed for the application selected by following design procedure of experiments as 72 mm outer diameter and 3.22 mm thickness steel shaft.
- Stresses observed in the conventional shaft according to mathematical calculations as 109 Mpa which is confirmed by confirming FEA results of 107 Mpa for the similar pure torsional loading
- Total weight of the selected steel shaft for application is observed as 7.5 kg
- Steel shaft is verified for other failure modes possible for the shaft and we observed that Torque taken by the shaft before torsional buckling in conventional shaft is 35862 N-m and for aluminum shaft it is observed as 3830 N-m
- Design for torsional rigidity gives in conventional design maximum angle of twist per meter is conventional shaft is 1.35 Degree / meter which is very high when verified for the aluminum design to suite the torsional shear.
- To increase the torsional rigidity we have included layer of epoxy material inside the aluminum shaft.
- As maximum allowed angle of twist in automotive propeller shaft is not more than 1.5. Considering the constrained and also outer diameter to be fixed as 68 mm we have designed required thickness of the Kevlar epoxy inside the aluminium shaft as 4 mm in thickness
- Maximum stresses observed in the composite shaft are 149 Mpa which is nearby the maximum stress observed for only aluminum shaft.
- 8 layers of 0.5 mm and 90 and 0 alternative ply orientation Kevlar epoxy is used.
- The composite shaft is manufactured and tested for the torque transmitting capacity.

VIII. CONCLUSION

- We have calculated 72 mm as outer diameter of the aluminum shaft and 2 mm thickness can be stuffed inside with 4 mm thick Kevlar Epoxy which can be used as replacement to the steel shaft for the given torque transmission application.
- Composite shaft made up of aluminum alloy and Kevlar epoxy material can be used to replace the conventional steel shaft in the given application successfully.
- Weight of the shaft is reduced by 55.87 % when composite shaft is used instead of conventional hollow steel shaft as propeller shaft of the given vehicle is observed.
- The manufactured composite shaft successfully withstood the torque which will be applied in the application.

IX. FUTURE SCOPE

- Different ply angle combinations can be tried in the FEA while designing the shaft of composite material and effect on the natural frequency and the deflection of the shaft can be studied.
- Epoxy Composites with some metal mesh can be used as alternative for the aluminum and study can be performed to compare the effect on the generated solutions weight.

REFERENCES

[1] R. P. Kumar Rompicharla, Dr. K. Rambabu (2012), Design and optimization of drive shaft with composite materials, *International Journal of Engineering Research & Technology (IJERT) Vol. 1 Issue 7, ISSN: 2278-0181.*

[2] Bhushan K. Suryawanshi, Prajitsen G. Damle (2013), Review of Design of Hybrid Aluminum/ Composite Drive Shaft for Automobile, *International Journal of Innovative Technology and Exploring Engineering (IJITEE), ISSN:2278-3075, Volume-2, Issue-4, 259-266.*

[3] Harshal Bankar, Viraj Shinde and P. Baskar (2013), Material optimization and weight reduction of drive shaft using composite material, *IOSR-JMCE, ISSN:2278-1684, Volume 10, Issue 1, PP 39-46.*

[4] V. S. Bhajantri, S. C. Bajantri, A. M. Shindolkar and S. S. Amarapure (2014), Design and analysis of composite drive shaft, *International Journal of Research in Engineering and Technology, ISSN:2319-1163, 738-745*.

[5] R. SrinivasaMoorthy, Yonas Mitiku & K. Sridhar (2013), Design of Automobile Driveshaft using Carbon/Epoxy and Kevlar/Epoxy Composites, *American Journal of Engineering Research (AJER), ISSN:2320-0847, Volume-02, Issue-10, 173-179*.

[6] Arun Ravi (2014), Design Comparison and Analysis of a Composite Drive Shaft for an Automobile, *International Review of Applied Engineering Research, ISSN: 2248-9967 Volume 4, Number 1, 21-28*.