Design and optimization of IC Engine's Exhaust Valve

Miss Snehal S. Gawale[1], *PG Student,* Dr.S.N.Shelke [2], *Asso.Prof. G.E.S's R. H. Sapat COE, Nashik*

***Abstract*— Exhaust valve plays important role in the smooth-running of internal combustion engine. Basic function of the exhaust valve is to provide the path to expel out the exhaust gases out of the combustion chamber. During the operation of internal combustion engine, exhaust valves are subjected to the axial stresses due to exhaust gas pressure, cyclic stresses due to return spring load, thermal stresses due to very high temperature inside the combustion chamber and inertia force arising on the account of valve assembly. The result of which maximum stress concentration is at the fillet section of exhaust valve. In this paper, engine valve is designed to reduce the stress concentration by selecting suitable fillet radius with secondary objective is to increase the working life of exhaust valve by recommending the best alternative material through finite element analysis and verified experimentally over an Universal Testing Machine for compressive loading.**

***Index Terms*— Exhaust valve, Fillet radius, Finite element analysis, Stress concentration, Universal testing machine etc.**

I. Introduction

Engine valves are termed as IC engine's precision components. If the exhaust valve is not designed properly then it fails and the following stroke will begin to mix with exhaust fumes rather than clean air. This may be inadequate for proper combustion and it leads to poor running conditions. Exhaust valve fail at higher rate than intake valve. Because intake valves are virtually cooled by fresh air, however exhaust valves are subjected to a very high temperature burnt gases. Because of that it can be exposed to very high thermal stresses more than intake valves and hence there are more chances of failure of exhaust valves rather than intake valves. Exhaust valves are very important engine components that are used to control the flow and exchange of gases in internal combustion engines. The detailed literature is available relevant to the proposed study.

II. Literature Survey

Jerzy Jaskólski et.al [1] had focused on the temperature and stress fields of valves of IC Engine and performed structural and thermal analysis to notice the temperature computed in the middle are too low. Jafari et.al [2] have proposed the valve fault diagnosis in IC engines using acoustic emission and artificial neural network and shown that time and frequency Domain analysis only detects the difference between faulty and healthy valves. Gajbhiye, et.al [3] had concerned the vibration testing and performance analysis of IC exhaust valve using finite element technique. It is concluded that stem of valve is most affected zone and valve may get damage due to high vibrations at resonance frequency. More et.al [4] have proposed the analysis of valve mechanism – a review. In this basics of valve mechanism, components, analysis models, valve performance parameters were studied. Sanoj. T, et.al [5] have proposed the thermo mechanical analysis of engine valve and it evident that the best material for the valve is Nimonic 105A as far as thermal and structural behaviour is concerned. Yuvraj K. Lavhale, et.al [6] had focused on the overview of failure trend of inlet & exhaust Valve. In this work different modes of valve failure were studied using methods of fracture analysis. It is concluded that valve failure occurs due to mechanical fatigue, thermal fatigue, thermo mechanical fatigue which is due to cyclic load, cyclic stresses. Goli Udaya Kumar, et.al [7] had analyzed the failure analysis of IC engine valves by using ANSYS. Failures due to fatigue, high temperature effects and failures due to impact load were studied. In the proposed work coupled field analysis (combined analysis of static and thermal) is done on valve, valve with seat by varying two materials. As per the results magnesium alloy is the right choice for maximum life of valve. Naresh Kr. Raghuwanshi et.al [8] had given a review on the failure analysis of IC engine valves. From the study, it is quite evident that a common cause of valve fracture is fatigue. Kum-Chul et.al [9] has studied the durability analysis methodology for engine valve considering head thermal deformation and dynamic behavior. From the results, it is found that the momentary maximum stress occurs at the valve neck and the maximum temperature presents at the same position. Consequently it is expected that the valve neck will be very weak in fatigue.

From the literature review it is seen that most of the studies on exhaust valve design had focused on fatigue behavior, wear behavior, deformation mechanisms in metallic materials. However, very less research is done in design of exhaust valve based on optimization of its any parameter. Therefore this study is conducted to design the exhaust valve by optimizing the fillet radius and to recommend the best alternative material for valve through experimentation and validation in order to increase the working life of exhaust valve.

III. Problem Defination

A. Problem statement

Past research and experiences had indicated that during the operation of the internal combustion engine, the maximum stress concentration is developed at the junction area of valve stem and valve head. Generally such a discontinuities in cross section of stem and head of exhaust valve is a functional requirement. Change in cross sectional area should be gradual to the possible extent, hence fillet is provided at the junction where there is abrupt change in cross section due to different cross section of stem and head. The presence of stress concentration cannot be totally eliminated but it may be reduced to some extent by selecting suitable fillet radius.

Problem statement: "To design the exhaust valve of four stroke diesel engine with modeling and structural analysis and to select suitable fillet radius for which stresses are less. Further material selection is to be done based on analysis. So that it can withstand to given operating conditions and to verify it experimentally on UTM."

B. Objectives

1) Study the basics of valve and different modes of failure in exhaust valve
2) Design the valve as per the specification and model it in CATIA and analyze it in ANSYS software.
3) Study the different valve materials and recommend the best alternative material for valve with stress and weight as a selection criterion
4) Conduct test on Universal Testing Machine to find stress and strain for experimental validation

C. Specification of the existing valve

4-Stroke CI engine-
Bore x Stroke (D X L) = 120 X 125 (mm)
Valve seat angle, $\alpha = 45^0$
Gas Velocity, v_g = 2100m/min
Length of stem, l = 10.5 cm
Engine speed, N_s = 1150 rpm
Max. Gas Pressure, P_{max} = 6.0 N/mm^2
Mean Piston Speed, N = 275 m/min
Exhaust valve Temperature, $T = 750^0$C.
Factor of safety, FOS = 1.5

TABLE I
MATERIAL PROPERTIES OF EXISTING VALVE

Material properties	Symbol	Values for Martensitic steels VV45
Density	ρ	7627-6611 kg/m^3
Young's Modulus	E	210 GPa
Ultimate Tensile Strength	S_{ut}	776 MPa
Yield Strength	S_{yt}	350 MPa
Composition		Mn=0.4 %, C = 0.45%, Si=3.30 %, S=8.6 %

IV. Design of Exhaust Valve

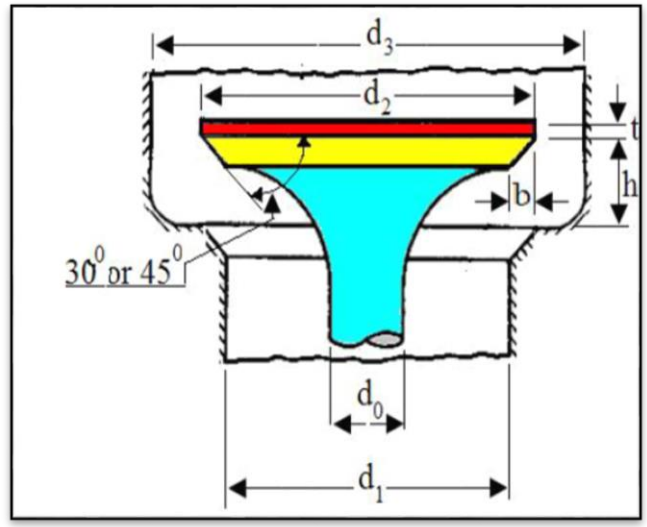

Fig. 1. Geometry of exhaust valve

A. Design steps

(i) Port diameter (d_1) is calculated as

$$d_1 = D\sqrt{\frac{N}{v_g}} \tag{1}$$

(ii) Valve lift (h) is calculated as

$$h = \left(\frac{0.25 d_1}{\cos\alpha}\right) \tag{2}$$

(iii) Port area (a) is calculated as,

$$a = (\pi d_1^2/4) \tag{3}$$

(iv) Thickness of valve disc (t) is calculated as,

$$t = k_1 d_1 \sqrt{\frac{P_{max}}{\sigma}} \tag{4}$$

Where, Material constant, K_1 = 0.42 (for carbon steel)
Allowable stress, σ = 57.5 MPa

(v) Valve head Diameter (d_2) is calculated as,

$$d_2 = d_1 + 2[t\sin(90^\circ - \alpha)] \tag{5}$$

(vi) Valve head opening diameter (d_3) is calculated as,

$$d_3 = \sqrt{d_1^2 + d_2^2} \tag{6}$$

(vii) Width of seating (b) is calculated as,

$$b = 0.5\,(d_2 - d_1) \tag{7}$$

(viii) Diameter of valve stem (do) is calculated as

$$d_o = (d_1/8) + 4 \tag{8}$$

Calculated dimensions of the exhaust valve by using the equation (1) to equation (8) are mentioned in the Table II.

TABLE II
DIMENSIONS OF EXHAUST VALVE

Sr. no	Design Parameter	Symbol	Dimension
1.	Port Diameter	d_1	43.42 mm
2.	Valve lift	h	15.35 mm
3.	Port area	a	1480.70 mm
4.	Thickness of valve disc	t	5.89 mm
5.	Valve head Diameter	d_2	51.74 mm
6.	Valve head opening diameter	d_3	67.55 mm
7.	Width of seating	b	4.16 mm
8.	Diameter of valve stem	do	9.42 mm

(ix) Diameter check:

$$0.7854\,(d_3^2 - d_2^2) \geq 0.7854\, d_1^2 \quad (9)$$

$$1480.83 \geq 1480.71$$

(Hence design is safe)

(x) Size of valve ports check:

$$Vg \times a = Ap \times Cp_{ave} \quad (10)$$

Where,

Piston area, A_P = 11309.73 mm^2
Average piston velocity, Cp_{ave}
$Cp_{ave} = 2\ L\ N_S$ = 287.5 m/min

Hence, Port area, a =1.548 x 10^{-3} mm^2
Thus, port diameter, d_1 = 43.40 mm, which is approximately equal to port diameter, d_1 calculated by using equation (1).
(Hence design is safe)

(xi) Exhaust valve design check:

$$V_g^{'} = \frac{14.7 V_g T \eta_{ch} 190}{520 P \times (190 + \alpha + \beta)} \quad (11)$$

$V_g^{'}$: For Stationary engines ≤18000 ft/min – (exhaust valve).

Where,

Exhaust temp. in Rankin, T = 1211.67 R
Charging efficiency, η_{ch} = 85%;
Pressure of gas, P =14.7 psi = 0.10135 MPa
Opening advance, α = 45°
Closing delay, β = 10 to 20°
Duration of valve opening, $(180+\alpha+\beta)$ = 240^0

Thus, $V_g^{'}$ = 10234.47 ft/min≤18000ft/min
(Hence design is safe.)

Thus, equation (9) to (11) justified that the designed exhaust valve for the given specification of the engine is safe.

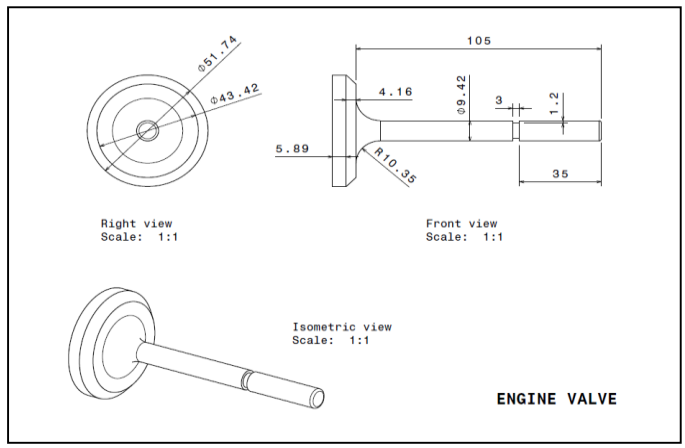

Fig 2.Valve Drawing with evaluated dimensions

B. Force calculation

Forces on the exhaust valve are due to:

1. Force due to gas pressure, F_G (when valve opens),

$$F_G = \frac{\pi}{4} d_2^2 P_c \quad (12)$$

$$F_G = 946.14 \text{ N}$$

Where,

Cylinder pressure, p_c = 0.45MPa

2. The inertia force, F_A (when the valve moves up),

$$F_A = m \times \alpha' \quad (13)$$

Substituting valve acceleration, $\alpha' = \pi^2\, \omega^2\, h / 2\, \Theta_L^2$ and angle of lift, $\Theta_L = ½\, \Theta_{cam}$ in equation (13).

$$F_A = 2m\, \pi^2\, \omega^2\, h / \Theta_{cam}^{\,2}$$

$$F_A = 36.15 \text{ N}$$

Where,

Valve mass, m = 0.213 kg
Cam Shaft Speed, ω = 60.21 rad/sec (For 4- stroke)
Cam angle during valve lifting, Θ_{cam} = 145°

3. The initial spring force F_I (To hold the valve in its seat against the suction or negative pressure inside the cylinder),

$$F_I = \frac{\pi}{4} d_2^2 P_s \quad (14)$$

$$F_I = 52.56 \text{ N}$$

Where,

Maximum Suction pressure, p_s = 0.025 MPa

Total force acting on valve face (F_T) is calculated as

$$F_T = F_G + F_A + F_I \quad (15)$$

$$F_T = 1034.85 \text{ N}$$

Tensile force generated due to inertia, F_A=36.15 N and compressive force due to gas pressure and initial spring force ($F_G + F_I$) = 998.7 N.

V. METHODOLOGY FOR FILLET RADIUS SELECTION

A. Numerical Method

By using valve drawing, modeling is done in CATIA and converted into .igs file. This .igs file is then imported in the ANSYS workbench and assigned same to geometry menu in structural analysis. Then the preferences static feature has given. Existing material (martensitic steel VV45) properties of exhaust valve has added in engineering data. After that meshing of imported model is done using mesh option. Fig.3 (a) shows the CATIA model of exhaust valve with 10.35 as its fillet radius and Fig. 3(b) shows the tetrahedral meshing of exhaust valve model with 10.35 mm fillet radius. The mesh should be finer and accurately represent the geometry in the critical areas i.e. the areas where stress is going to be important.

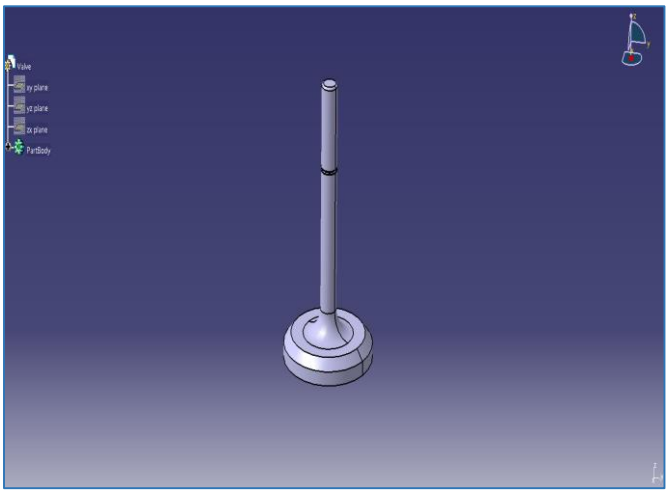

Fig.3 (a).CATIA model with 10.35 mm fillet radius

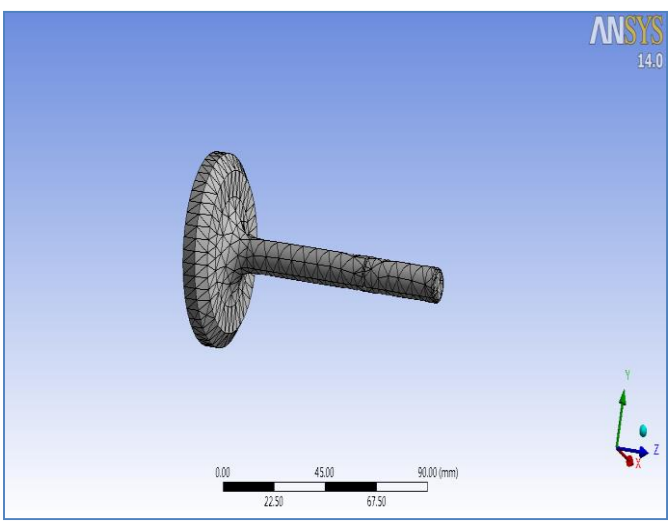

Fig.3 (b). Meshed model with 10.35 mm fillet

Force is applied through the option loads and fix support is provided through option displacement. After applying forces and supports in solution menu, von misses is selected through stresses option and by pressing solve button, solution is obtained for said quantities.

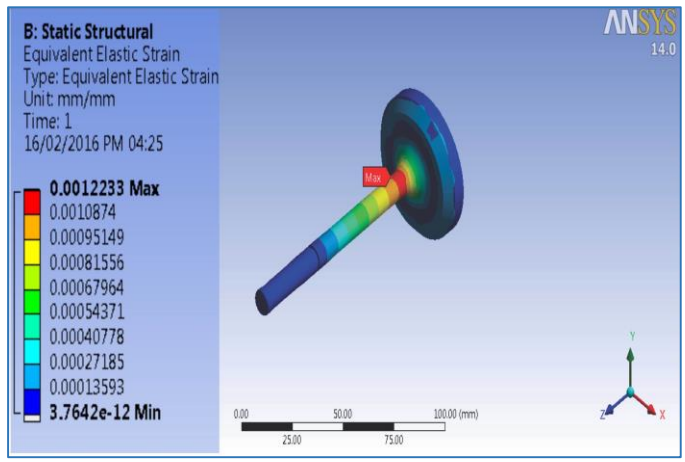

Fig.4. Elastic Strain for valve model with 10.35 fillet radius

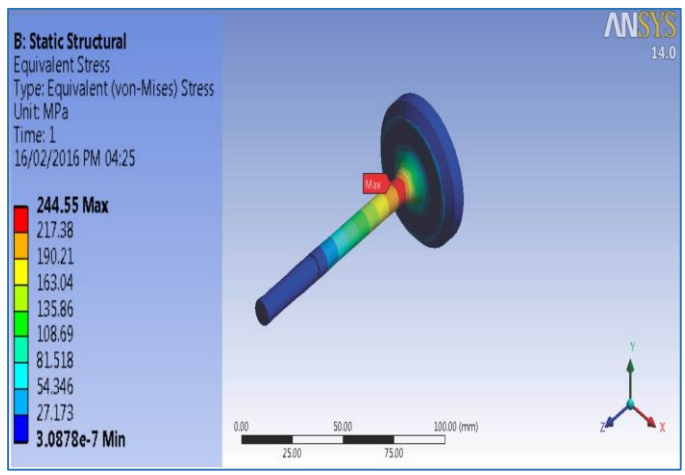

Fig.5. Von mises stress for valve model with 10.35 fillet radius

It is observed that stress is maximum at the fillet section. So there is need to find optimum fillet radius for which stress is less compare to the existing exhaust valve with 10.35 mm fillet radius. Thus different trials are conducted to find the optimum fillet radius. Table III shows the different trials for valve:

TABLE III
FILLET RADIUS TRIALS FOR STRESS CONCENTRATION DETERMINATION

Trials	Radius, (mm)	Elastic Strain, (mm/mm)	Von Mises Stress, (MPa)
1	0	0.0017041	337.3
2	2.5	0.0015502	309.3
3	5.0	0.0013725	272.82
4	7.5	0.0012995	259.51
5	10.35	0.0012233	244.55
6	12.5	0.0011452	228.79
7	13.0	0.0011121	222.23
8	13.5	0.0011032	220.51
9	14.0	0.0010853	216.91
10	14.5	0.0010658	213.01
11	15.0	0.0010593	211.68
12	15.5	0.0010705	213.85
13	16.0	0.0010754	214.43
14	17.0	0.0010869	216.73

It is observed that maximum stress concentration is at the junction which is equal to the 244.55 MPa, greater than allowable stress of existing material (i.e. martensitic steel

VV45). So, there is need to adopt some changes in design to reduce the stress concentration. Thus, suitable fillet radius selection is the only factor to adopt changes in the design of exhaust valve. Because all the other exhaust valve's design parameters has design constraint due to size restriction. Hence, in this paper different trials are taken for the fillet radius by static structural analysis and using finite element analysis, suitable fillet radius is selected for which stress generated is less by considering the size restrictions. Allowable stress is 233.33 MPa considering the yield stress, S_{yt} = 350 MPa and factor of safety, FOS = 1.5.

From the above results Table III, it can be seen that after 15.0 mm fillet radius stresses generated are again increasing and hence 15.5, 16 and 17 mm can't be consider. Due to valve seat arrangement and size restriction, maximum radius we can afford to select is 14.0 mm for which von mises stress is 216.91MPa less than allowable stress 233.33MPa, and hence fillet radius for further work is 14.0 mm.

Fig. 6 shows the graph of variation in Von mises stress in comparison with the different fillet radius.

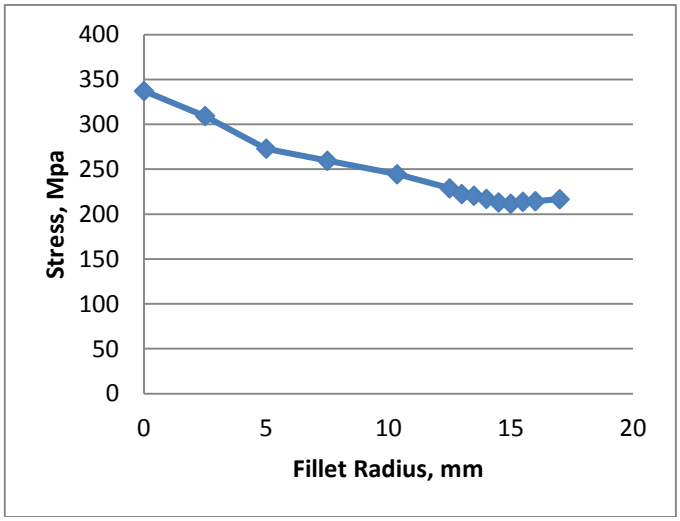

Fig.6. Graph of von mises stress vs. fillet radius

Elastic strain and von mises stress for the exhaust valve with selected fillet radius i.e. 14 mm is shown in the Fig. 8 and Fig. 9:

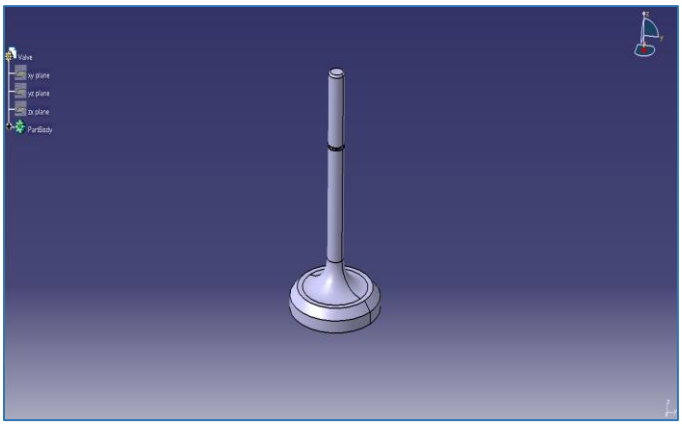

Fig.7.CATIA model with 14 mm fillet radiu

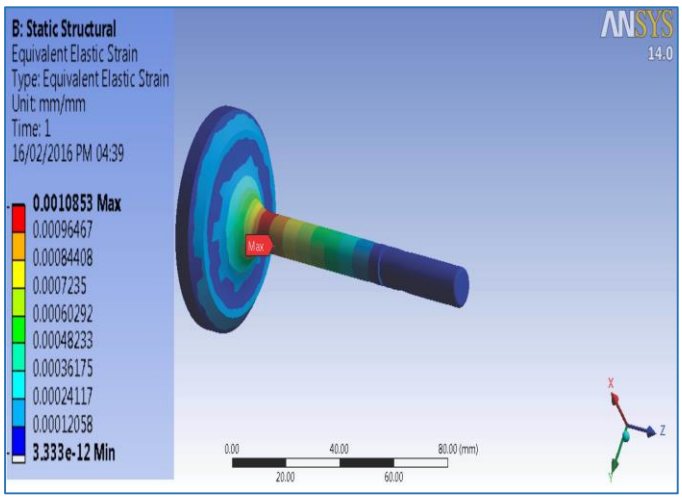

Fig.8. Elastic Strain for valve model with 14 mm fillet radius

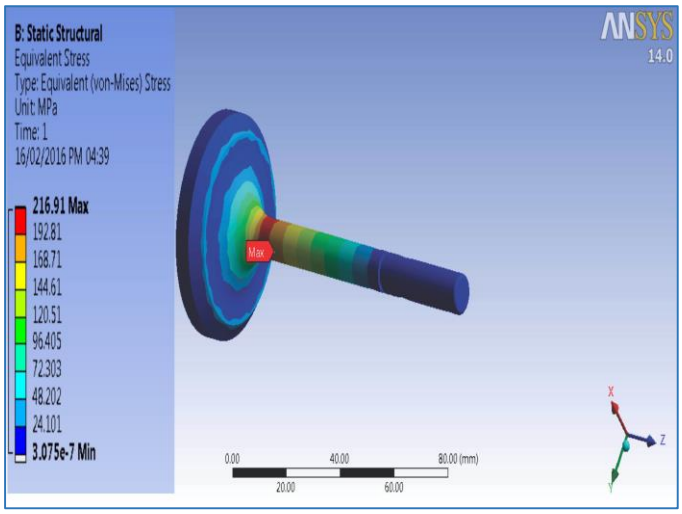

Fig.9. Von misses stress for valve model with 14 mm fillet radius

TABLE IV
STRESS COMPARISON FOR VALVE WITH EXISTING AND SELECTED FILLET RADIUS MODELED WITH SAME MATERIAL (MARTENSITIC STEEL VV45)

Sr. No.	Fillet radius (mm)	Von mises stress (MPa)	Allowable stress (MPa)
1.	10.35 (initial)	244.55	233.33
2.	14 (new one)	216.91	233.33

It is observed that von mises stress for the exhaust valve with optimized fillet radius 14 mm is less compared with the exhaust valve with fillet radius 10.35 mm and it is in allowable limit. Thus primary objective of the stress concentration reduction by selecting suitable fillet radius is fulfilled. Now, secondary objective is to increase the working life of exhaust valve by recommending the best alternative material through finite element analysis. Different materials that are recommended for exhaust valve are discussed in next section.

B. Material selection:

1. Super Alloy 21-2N Valve Steel (UNS K63017)

TABLE V
MATERIAL PROPERTIES (SUPER ALLOY 21-2N VALVE STEEL)

Selected material	Symbol	Super Alloy 21-2N Valve Steel
Density	ρ	7.60 g/cm³
Young's Modulus	E	215 GPa
Yield Strength	S_{yt}	440-580 MPa
Composition		Mn=8.5 %, C = 0.55%, Si=0.25 %, Ni=2.13 % Mo=0.50%, Cr=20.2%

2. AISI 1541 Carbon Steel

TABLE VI
MATERIAL PROPERTIES (AISI 1541 CARBON STEEL)

Selected material	Symbol	AISI 1541 Carbon Steel
Density	ρ	7.90 g/cm³
Young's Modulus	E	190-210 GPa
Yield Strength	S_{yt}	380 to 650 MPa
Ultimate Tensile Strength	S_{ut}	670 to 750 MPa
Composition		Mn=1.35-1.65%, C = 0.360-0.44%, Fe=97.82-98.29%, P=0.040%,S=0.050%

3. Austenitic Steel- 23-8N

TABLE VII
MATERIAL PROPERTIES (AUSTENITIC STEEL- 23-8N)

Selected material	Symbol	Austenitic Steel- 23-8N
Density	ρ	7.800 g/cm³
Young's Modulus	E	193 GPa
Yield Strength	S_{yt}	550 MPa
Ultimate Tensile Strength	S_{ut}	850 MPa
Composition		Mn=3-4%, C = 0.3-0.35%, Cr=22-24%, Ni=7-9%,Si=0.6-0.9%

To provide alternative material for exhaust valve, material properties in engineering data of ANSYS are edited and static structural analysis is done to find von mises stresses and elastic strain. Fig. 10 shows material properties of super alloy 21-2N that are edited in engineering data in order to apply this material to exhaust valve model with 14 mm fillet radius.

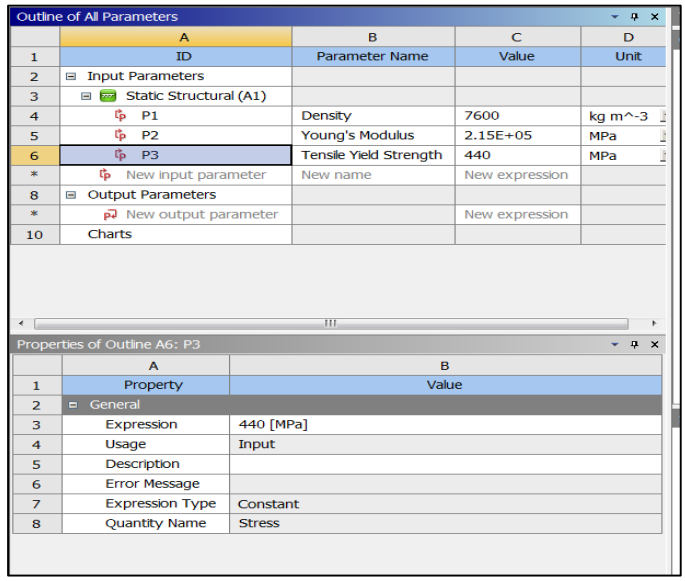

Fig.10.Properties of super alloy 21-2N edited in engineering data of ANSYS

Results obtained for valve model with fillet radius 14 mm by applying different materials are tabulated in Table IX which helps in selecting the best alternative to existing valve material in order to reduce the stress concentration further and thus to improve the working life of exhaust valve.

TABLE IX
RESULTS BASED ON MATERIAL FOR FILLET RADIUS 14 MM

Material	Elastic Strain, mm/mm	Von Mises Stress, MPa	Allowable Stress, MPa	Volume, mm³	Density kg/m³	Weight, g
Martensitic steels VV45	0.0010853	216.91	233.33	29146	7500	218.6
21-2N	0.0010702	213.87	293.33	29146	7600	221.5
AISI 1541	0.0011084	221.5	266.67	29146	7900	230.2
Austenitic Steel 23-8N	0.0010885	216.92	366.67	29146	7800	227.3

From the above result it can be seen that percentage of von-misses stress and weight for material 21-2N is lower compare to other materials. Thus, material super alloy 21-2N steel gives us better results, hence can be used as an alternative to existing material of exhaust valve.

C. Experimental Method

1. Experimental set up information:

Numerical solution method is approximate method. So the numerical result has to be compared with either Analytical results or with Experimental results, to ensure as per requirement working and the safety of the component.

TABLE X
UTM SPECIFICATION

Max Load Capacity	100 KN
Load Accuracy	Within +/- 1%
Test Space	
Tensile	550 mm
Compression	500 mm
Piston Stroke	200 mm
Dimensions	750*600*2100 mm
Power Supply	Three-Phase, 240V-50HZ

Fig.11.UTM set up for testing of exhaust valve

Fig.12.Tested component of Exhaust valve of 14mm fillet radius

Fig.13.Exhaust valve testing –fixture designed for special application

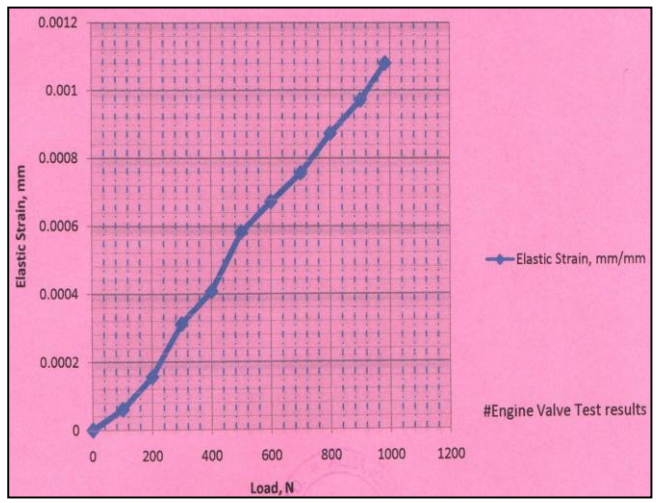

Fig.14.UTM set up for testing of exhaust valve

Fig.13 shows the graph of elastic strain vs. load. It is observed that when the force is applied gradually from 0 to 998.7 N, strain increases from 0 to 0.00108 mm/mm.

TABLE XI
OBSERVATION CHART ON UTM

Material	Fillet radius mm	Load N	Elastic strain mm/mm (Experimental)	Stress N/mm^2
Super Alloy 21-2N	14 mm	998.7	0.0010775	231.66

VI. Results and Discussion

Von misses stress in exhaust valve with initial fillet radius 10.35 mm was 244.55 MPa, which is more than the allowable stress 233.33MPa. In order to reduce this stress concentration, changes are adopted in design by selecting suitable fillet radius through numerical method and it is equal to 14 mm for which estimated von misses stress is 216.91 mm. Thus design modification with suitable change in fillet radius resulted into reduction in stress concentration by 11.30%.

Further in the selection of best alternative material, it is

observed that super alloy 21-2N steel shows stress (3.44%) and weight (3.78%) less than AISI 1541. Also it shows stress (1.41%) and weight (2.55%) less than austenitic 23-8N. Thus, on the basis of stress and weight criteria super alloy 21-2N steel gives better results compared to AISI 1541 and austenitic 23-8N and thus it is selected as an alternative to initial valve material (martensitic steel vv45).

It is observed that exhaust valve made of super alloy 21-2N steel with 14 mm as its fillet radius has von misses stress 213.87 MPa in analysis software (FEA) and experimentally it is obtained as 231.66 MPa which are in allowable limit. Because allowable stress for super alloy 21-2N steel is 293.33 MPa. Thus % deviation in stress obtained by using FEA and experimental analysis is 8.32% which is acceptable. Thus numerical as well as experimental result shows that exhaust valve designed with suitable fillet radius and material has reduced the stress concentration compared to existing valve failed due to stress concentration.

VII. Conclusion

Proper selection of valve fillet radius is essential to avoid the exhaust valve failure. Thus, fillet radius plays important role in exhaust valve failure and should be carefully selected.Valve with fillet radius 14.0 mm shows safe results and is selected for further work. Overall reduction in stress is 14.35 % and weight is on greater side by 1.29 % (For 21-2N material) and is not a big issue considering stress reduction.

VIII. Future Scope

a) Dynamic Analysis can be done.
b) Thermal analysis can be included for further improvement.
c) Modal analysis can be added to study natural frequencies and their behavior for various frequencies.

Acknowledgment

The authors of this present work acknowledge the technical support given by Alliance Engineering Solutions PVT ltd.

References:

[1] Jerzy Jaskolski, Rudolf Krzyzak of Institute of Vehicles and IC Engines, Poland “The Temperature - and Stress Fields of Valves of IC Engine” at Journal of KONES Power train and Transport, Vol.14, No. 3 2007.

[2] S. M. Jafari, H.Mehdigholi, and M. Behzad “Valve Fault Diagnosis in Internal Combustion Engines Using Acoustic Emission and Artificial Neural Network” Hindawi Publishing Corporation Shock and Vibration Volume 2014, Article ID 823514, 9 pages.

[3] B.E.Gajbhiye, V.V.Bhoyar, S.B.Chawale, R.S.Ambade“Vibration Testing and Performance Analysis of IC Exhaust Valve Using Finite Element Technique” at International Journal of Research in Advent Technology, E-ISSN: 2321-9637Vol.2, No.2, February 2014.

[4] A. S. More & S P. Deshmukh“Analysis of Valve Mechanism – A Review” at International Journal IOSR Journal of Mechanical and Civil Engineering (IOSR-JMCE) ISSN (e): 2278 1684, ISSN (p): 2320–334X, PP: 06-09.

[5] Sanoj. T &S. Balamurugan “Thermo Mechanical Analysis of Engine Valve” at International Journal of Science and Research (IJSR) ISSN (Online): 2319-7064, Volume 3 Issue 5, May 2014.

[6] Yuvraj K Lavhale & Prof. Jeevan Salunke “Overview of Failure Trend of Inlet & Exhaust Valve” at International Journal of Mechanical Engineering and Technology (IJMET), ISSN 0976 – 6340(Print), ISSN 0976 – 6359(Online), Volume 5, Issue 3, March (2014), pp. 104-113.

[7] Goli Udaya Kumar & Venkata Ramesh Mamilla “Failure Analysis of Internal Combustion Engine Valves by using ANSYS“ at American International Journal of Research in Science, Technology, Engineering & Mathematics, 5(2), December 2013-February 2014, pp. 169-173.

[8] Naresh Kr. Raghuwanshi et.al. “Failure Analysis of Internal Combustion Engine Valves: A Review” by International Journal of Innovative Research in Science, Engineering and Technology ISSN: 2319 – 8753 Vol. 1, Issue 2, and December 2012.

[9] Kum-Chul, Oh et.al. “A Study of Durability Analysis Methodology for Engine Valve Considering Head Thermal Deformation and Dynamic Behaviour” of R&D Center, Hyundai Motor Company, at 2014 SIMULIA Community Conference

[10] P. Forsberg∗, P. Hollman, S. Jacobson et.al. “Wear mechanism study of exhaust valve system in modern heavy duty combustion engines”

[11] Engine valve steel, 3rd. starwire (India) limited. New Delhi, 1999, pp. 27-109.