Convective Heat Transfer Performance of Helical Coil with Variation in Pitch

[#1]Aniket Dakhore, [#2]V.N. Kapatkar

[1]Mechanical Engineering, SCOE, SPPU, Pune India.
[2]Mechanical Engineering, SCOE, SPPU, Pune India

Abstract

The heat and mass transfer are higher in a curved tube than in an equivalent straight tube at the same flow rate due to existence of superimposed secondary flow. The helical coils are introduced as passive heat transfer enhancement techniques which are widely used in various industrial applications. Present paper is focused on determining effect of pitch variation of helical coil on heat transfer performance by variation in pitch of helical coil.

Keywords: Thermal Analysis, helical coil, Dean number, secondary flow.

1. Introduction

Helical coil heat exchanger are one of the most common equipment found in many industrial applications ranging from chemical industries, food processing units, power production, cooling electronic equipments, environmental engineering, air conditioning, waste heat recovery systems and cryogenic processes. The flow in helically coiled tube is developed due to centrifugal forces. A secondary flow field having circulatory motion is developed because of curvature of tube which causes the fluid particles to move towards the central core region of the helical coil tube. This secondary flow leads to increase in rate of heat transfer and also reduces the temperature gradient across the cross section of the tube. There exists an additional convective heat transfer mechanism which is perpendicular to the main flow which is absent in conventional heat exchanger.

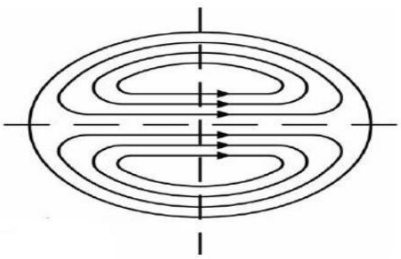

Fig. 1 Secondary flow in helical coil

Recently, there is considerable development has done on the subject of increasing heat transfer mainly in applications of heat exchangers. The increasing heat transfer is associated with the type of flow of the fluid. Due to smaller thickness of thermal boundary layer and quickly transporting of thermal energies from place to place in turbulent core by eddies the heat transfer in turbulent flow tends to occur faster than in laminar flow. Several papers studied and concluded that helically coiled tubes render superior results than straight tubes while working in heat transfer application.

The heat transfer enhancement techniques which are classified into two main categories which are active and passive techniques. Active techniques are those which requires power and passive are those which need no such external power. Shell and straight tube heat exchanger becomes uneconomical in cases like under condition of laminar flow or lesser flow rates leading to resulting in low heat transfer coefficient. Here Helical coil heat exchanger provides better selection than straight tubes.

2. Literature review

D. G. Prabhanjan et al (2002) done a comparative study between straight tube heat exchanger and helical coiled heat exchanger. The helical coil was having heat transfer coefficient 1.16 and 1.43 times larger than that of straight tube, for bath temperatures of 40 and 50 degree Celsius, respectively. This increase of heat transfer coefficient of water bath could be the result of buoyancy effect on outside of coil and the pipe. In both cases the water bath was not actively mixed therefore an increase in temperature difference between tube wall and water could result in buoyancy effect thereby increase amount of mixing hence increases the heat transfer coefficient. M.R. Salimpour (2009) carried out an experimental investigation to study heat transfer coefficients of the shell and helically coiled tube heat exchangers. The research based results gave two corellations for the Nusselt number of helical heat exchanger.

Correlation for inner tube nusselt number,

$$= 0.152 \times \quad .431 \quad 1.06 \; - .277$$

Correlation of shell side nusselt number,

$$= 19.64 \times \quad 0.513 \quad 0.129 \; 0.938$$

Table 1. Dimensions of Helical coil.

Sr. No.	tube diameter (di)	coil diameter (Dc)	pitch (p)	length (l)	number of turns (N)	dimensionless pitch (γ)
1	12.7	130	25	5741	7	0.0612
2	12.7	130	30	5741	7	0.0734
3	12.7	150	36	5680	6	0.0764

Jamshidi et al (2013) determined the heat transfer coefficient experimentally. The paper studied the effect of shell and tube side flow rate, coil diameter and coil pitch on rate of heat transfer in coiled tube heat exchangers with the help of Wilson plot and Taguchi method.

Helical coil design and experimental setup.

The inner and outer diameter of helical coil tube is fixed. The pitch value is taken equal to the outer diameter of the tube. The coil diameter is also fixed arbitrarily. The remaining dimensions can be found out by following procedure given by Patil et al (1982).

The shell is made of M.S. having diameter of 170 mm, length of shell is 200 mm. the coil is made from copper tube of size 12.7mm and enclosed at the center of shell. The geometrical specification of helical coil is given in table.

The setup consists of Shell and helical coiled tube heat exchanger, 2 rotameters of 20 to 200 lph for mass flow measurement, k type thermocouples with temperature indicator, 3000 watts heater for hot water tank and cold water reservoir, one hot water pump of 0.28 hp and a cold water pump. The schematic of setup is shown in figure 2.

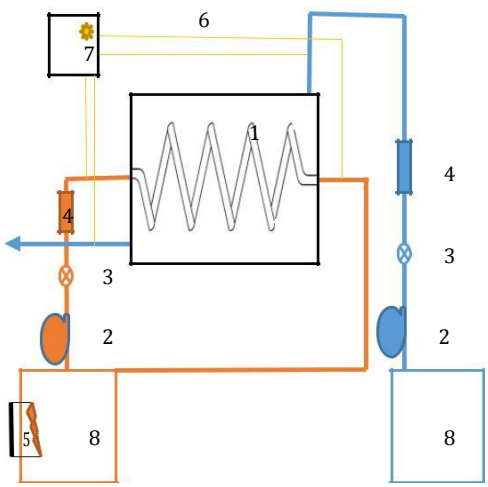

1. Test Section 2. Water Pump 3. Flow Control Valve
4. Rotameters 5.Thermostatic Heater
6. Thermocouple Wires 7. Temperature Display
8. Water Tanks

Fig . 2 Schematic of the test setup

The experiment is carried out by varying mass flow rate of tube side keeping shell side mass flow rate constant. The stepwise experimentation of the heat exchanger is carried out and it provides data related to inlet and outlet temperature, mass flow rates of hot and cold fluids and concerned properties of fluid at that condition. These data has to be tabulated systematically for number of readings for each type of coil. From these information the value of heat load, LMTD, dimensionless numbers and heat transfer coefficients has determined. In Wilson plot method the graph is drawn between the quantity $\frac{1}{}$ and the overall thermal resistance R_{ov}.

Where R_{ov} is given by

$$= \frac{1}{\times}$$

The velocity of the fluid inside the tube,

$$\frac{.=}{\times /}$$

With these quantities the graph is plotted and the best fit is obtained as y= mx + C. From the graph the C_1 value is found and the C_2 value is calculated as,

$$_2 = \frac{1}{\times}$$

The inside heat transfer coefficient is given by

$$2 \times$$

Thus by this process the heat transfer coefficient and dimensionless numbers were calculated.

Result and discussion

The data is tabulated and calculations depicts that the variation in pitch value affects the heat transfer performance. As the coil side mass flow rate increases the Reynolds number increases. The Dean number depends on Reynolds number and thus it also increases. The Nusselt number is calculated and plotting the graph of Nusselt number versus Dean number shows that by increase in Dean number Nusselt number increases. This maybe due to high turbulence in flow as Dean number corresponds to the geometry of the coil. But as the pitch value increases the tube side Nusselt number decreases. The reason maybe the effect of secondary flow is more significant in low pitch value than higher pitches thereby increasing the heat transfer performance.

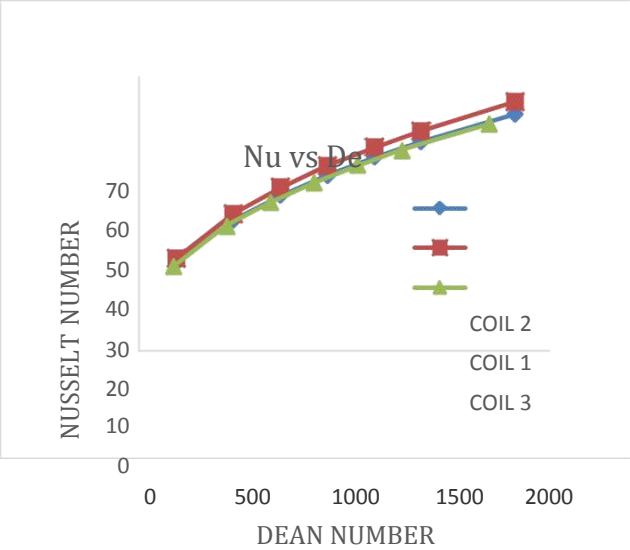

Fig. 3 Graph of Nusselt number vs Dean number.

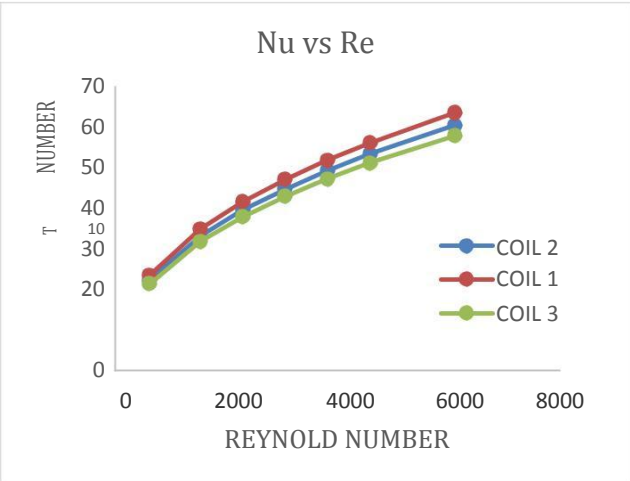

Fig. 4 Graph of Nusselt number vs Reynolds number

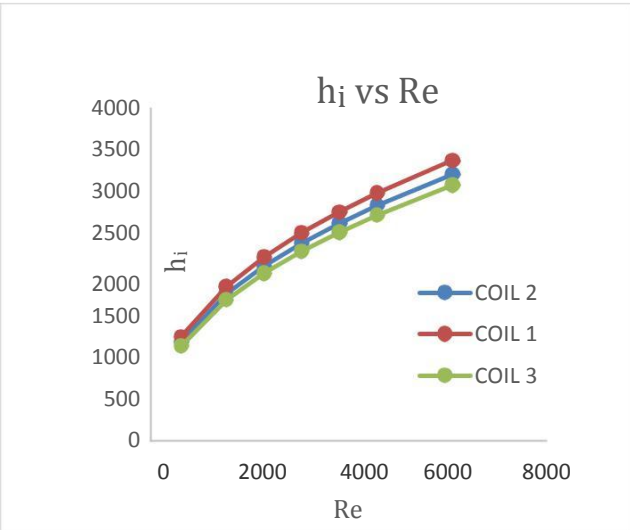

Fig. 5 Graph of Heat transfer coefficient vs Reynolds number.

The Reynolds number have same effect as Dean number as shown in graph of Nusselt number vs Reynolds number. Here also increase in pitch value the Nusselt number decreases. In another graph, the heat transfer coefficient is calculated and compared with Reynolds number as shown. The heat transfer coefficient of tube side increases with increase in tube side mass flow thereby increase in Reynolds number. The heat transfer coefficient also decreases with increase in pitch value for the same conditioned of Reynolds number.

Conclusions

The experimental results shows the difference in Heat transfer coefficient for the value of different pitch. As inner tube mass flow increases its Dean Number increases and thereby tube side Nusselt number and heat transfer coefficient increases. However, this increase in heat transfer coefficient is a function of coil side Reynolds number. The overall heat transfer increases and it is also function of shell side Reynolds number.

Also as coil pitch increases, the tube side Nusselt number decreases and this variation is effect of the tube side flow rate. The highest tube side Nusselt number is obtained by using the lowest coil pitch and the highest tube side flow rate. Whereas by increasing coil pitch, shell side Nusselt number increases.

References

D. G. Prabhanjan, G. S. V. Raghavan and T. J. Rennie (2002), Comparison of heat transfer rates between a straight tube heat exchanger and helically coiled tube heat exchanger, *International communications of heat and mass transfer*, vol 29 issue 2, pp. 185-191.

M. R. Salimpour, Heat transfer coefficient of shell and coiled tube heat exchanger (2009), *Experimental thermal and fluid sciences*, vol 33 pp. 203-207

N. Jamshidi, M. Farhadi, D.D. Ganji, K. Sedighi (2013), Experimental analysis of heat transfer enhancement in shell and helical tube heat exchangers, Applied thermal engineering, vol 51, pp. 644-652

Patil RK, Shende BW, Ghosh PK. (1982) Designing a helical-coil heat exchanger. *Chemical Engineering*; 92 (24): 85–88.