Aerodynamics Study of Automobile Car Ahmed Body using CFD Simulation to Predict the Drag Coefficient and Down Forces

[#1]Mrs. Ashwini A Landge, [#2]Prof. D. D. Palande

[1] Mechanical Engineering Department, Pune University, MCERC, Nashik-423101, India
[2] Associate professor, Mechanical Engineering Department, Pune University, MCERC,Nasik-42310,India

Abstract: The Ahmed body is simplified car body used in automotive field to study the impact of the flow pattern on the drag. The external aerodynamics of the car defines many major traits of an automobile like stability, comfort and fuel consumption at high speeds. The flow around the vehicle is characterized by high turbulent and three dimensional flow separations as well as there is a growing need for more insight into the physical features of these dynamical flows. The Ahmed Body is a simplified car, used in automotive field to investigate the flow analysis and find the wake flow around the body. Ahmed body is made up of round front part, a moveable z slant plane in the rear of the body to study the detachment phenomena at different angles, and a rectangular box which link the front part and the rear slant plane. The principal objective to study such a simplified car body is to tackle the flow processes involved in drag production. Through perceiving the mechanisms involved in creating drag one can be able to design a car to minimize drag and therefore reducing fuel consumption and maximize vehicle performance.

Keywords: External Aerodynamics, Drag Co-efficient, Ahmed Body, Drag Forces, CFD Simulation.

1. INTRODUCTION

The research of three-dimensional flow around a vehicle has become a subject of significant importance in the automotive industry. One apparent technique of improving the fuel efficiency of a vehicles is to reduce aerodynamic drag force by optimizing the body shape. Execution of fine aerodynamic design under stylistic constraints requires an immense understanding of the flow pattern phenomena and, especially, how the aerodynamics are impacted by changes in body shape. The flow area which is presents the major contribution to a cars drag is the wake flow backing the vehicle. The point at which the flow separates directs the size of the separation zone, and as a result the drag force. Clearly, a more accurate simulation of the wake flow and of the separation process is required for the accuracy of drag forecast.

A factual-life automobile is very complicated shape to model or to study experimentally. The simplified car shape was employed by Ahmed. (1984) which generates wholly three-dimensional regions of separated flow which may entitle a better understanding of such flow pattern. Ahmed performed a series of wind-tunnel experiments in order to study the wake structure at around typical automobile geometries. The study entrap on the time averaged structure resulted from visualizations of flow in the wake region for smooth quarter scale of automobile car models.

Utilization of the Computational Fluid Dynamics (CFD) codes by the engineering circle to forecast aerodynamic flow around ground vehicles has expanded rapidly in the previous few years. This rise in interest and use has resulted from enhancement in the predictive competent of codes, reductions in the expenditure of computing technology, and hike of the costs, to perform experiments and to maintain the experimental facilities.

2. LITERATURE REVIEW

Ahmed Body was one such generic bluff body proposed to study the external aerodynamics of the vehicles. The flow over the geometrically simple Ahmed reference body is used for the validation case for numerical simulations and it still continues a challenge numerical algorithms and turbulence modeling due to its complex three dimensional wake vortex interaction. The Ahmed body is a simplified car-shaped made-up of a parallelepiped with rounded edges at the front and a slanted face at the rear. The slant at the rear side of the vehicle causes the separation of flow and also a significant factor for drag forces of Ahmed body. This standard automobile geometry shape was proposed by

Ahmed and Ramm who then brings out the experimental work related to the aerodynamics of the body for various slant angles. In their study, Ahmed and Ramm had noticed that the most of the drag from the body is due to pressure drag, which was generated near the rear side of the vehicle. In the same paper, the authors observed that the strength of the flow separation in the vehicle is regulated by the slant angle.

The flow around the Ahmed reference body is complicated. Due to the slant in the rear of the vehicle, flow separation and counter rotating vortices are generated at the slant edges. The drag forces of Ahmed Body reaches at maximum when the slant angle is 30 deg. For slant angles higher than this value, the adverse pressure gradient in between the slant and the roof is so intense that the flow fully detaches over the slant. Below this critical slant angles (30 degree), the flow still separates but the pressure difference between the slant region and the side walls is still sturdy enough to generate substantial stream-wise vortices at the lateral slant edges. These prompt a downward motion over the slant, mainly in the downstream part. As a result, the flow separating at the upstream end of the slant can coupled further to the downstream. The flow around the Ahmed body has several flow separations from the front to rear of the vehicle. The flow recirculation caused by these flow detachment contributes the vehicle's drag. The location point at which the flow separates determines the size of the separation zone, and accordingly the drag force, thus an exact simulation of the wake flow and of the separation process is essential for the accurate result of drag predictions.

Numerous methods such as experimental studies, CFD simulations, lattice Boltzmann approach had been employed to understand the flow physics surrounding the Ahmed reference body. Lein Hart and his colleagues had performed the experiments for the two slant angles of 25 and 30 deg. The results such as velocity profile downstream the vehicle, were presented in terms of graphs. These results serve as benchmark results to validate for modern day numerical studies.

The use of CFD simulations for applications related to automobile has been on the rise since the improvement of computer hardware over the last few decades. CFD as in Computational Fluid Dynamics based on the Navier-Stokes equations i.e. the resulting equations of the mass, momentum and energy. The equations are separated based on either finite volumes or finite difference or finite element. Certain research had been devoted to simplify the flow physics by approximating as two-dimensional problem. In this approach, the three-dimensional effects will not be included Emmanuel observes the wake flow in the Ahmed reference body is mostly two-dimensional in nature for low incidences of rear slant and then becomes three-dimensional when the angle of hatchback approaches 30 and reverts to two-dimensional behavior for angles greater than 30°.

3. SUMMARY OF ASSUMPTIONS

1. The flow physics surrounding the Ahmed body as well the geometry is symmetrical, thus only half model was simulated
2. The CFD Simulations were conducted by using ANSYS FLUENT which has Reynolds Averaged Navier-Stokes (RANS) solver
3. The flow conditions didn't include the temperature filed so the energy equation was not solved for the simulations
4. The reference Reynolds number was based on the Ahmed Body' height
5. Inflow conditions to the vehicle was modeled using the Velocity Inlet boundary condition
6. While the flow outlets were modeled using the Pressure-Outlet boundary condition
7. Ahmed Body' surface was modeled using the Walls with No-slip conditions
8. Wall BC was used for the Top, Bottom and Side surfaces while the Symmetry BC was imposed at the Mid-Plane

4. OBJECTIVES

The pre- and the post-processing for the work are to be performed using the ANSYS ICEM CFD and the ANSYS FLUENT. Since the wakes around the Ahmed body to captured accurately, the refined mesh in those regions are needed. The block-structured approach that is available in ANSYS ICEM CFD will be used to create the necessary mesh requirements. The RANS (Reynolds Averaged Navier-Stokes Equation) solver of ANSYS FLUENT will be used for the CFD simulations.

The results will be presented in the form of velocity vector plots at various section planes both in longitudinal and cross-sectional directions as well as the velocity profile near the rear-slant of the Ahmed body, in a graphical form.

Key finding of this thesis is

1) Which simulation amongst the two gives more accurate value of coefficient of drag and downforce? 2] Which model (k-omega and k-epsilon) gives better results for Simulation 1 and Simulation 2.

There are three different methods to simulate such engineering problems. These methods are Experimental Method using Wind Tunnels, Numerical Method using ANSYS CFD like solvers and Analytical Method using theoretical calculations for calculating the drag coefficients & lift forces etc.

In this thesis work, we will be using only Numerical & Analytical Methods for study purpose and the experimental method will not be used as such but we will be comparing the results gained from above two methods with the results gained from experimental methods done already by someone else & which has been published as research paper. These papers will be our references.

In reality, our result values and the reference paper results values may not match exactly but we must compare the nature of the results and this will match with the same.
CFD Simulation using ANSYS work: We can use any one of the below mwtioned method/approach for study and the related model and the boundary conditions will be taken into account.
Simulation 1: (Wind Tunnel Method)
Inlet Velocity = Road Velocity = 42 m/s
Car Velocity = 0 m/s
Models:
k-omega SST : 1st Degree and 2nd Degree Solution (Momentum, Turbulent Kinetic Energy etc)
k-epsilon Standard 1st Degree and 2nd Degree Solution (Momentum, Turbulent Kinetic Energy etc)
To monitor:

1. Drag Co-efficient
2. Downforce

Simulation 2: (Real World Simulation)
Inlet Velocity = Car Velocity = 42 m/s
Road Velocity = 0 m/s
Models:
k-omega SST : 1st Degree and 2nd Degree Solution (Momentum, Turbulent Kinetic Energy etc)
k-epsilon Standard 1st Degree and 2nd Degree Solution (Momentum, Turbulent Kinetic Energy etc)
To monitor:

1. Drag Co-efficient
2. Downforce

5. CFD MODELLING AND APPROACH OF AHMED BODY

5.1 Ahmed Body Geometrical Details

The following figure shows the typical flow pattern around the Ahmed Body. Among a number of design requirements, the reduction of both drag and aerodynamic heating is the major challenge in the design of supersonic and hypersonic vehicles. Reducing the aerodynamic drag on these vehicles ensures reaching the desired range (or altitude) and, in the same time, enables economizing the fuel usage, simplifying the propulsion system requirements, and maximizing the ratio of payload to take-off gross weight

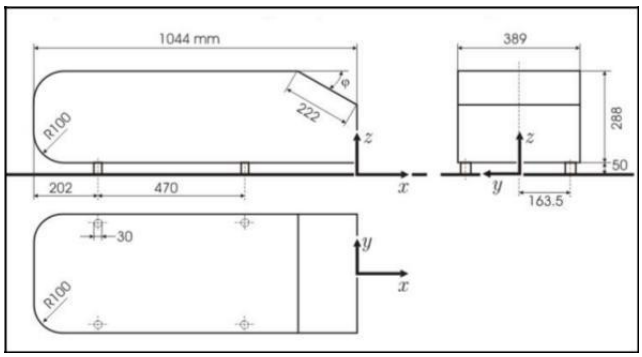

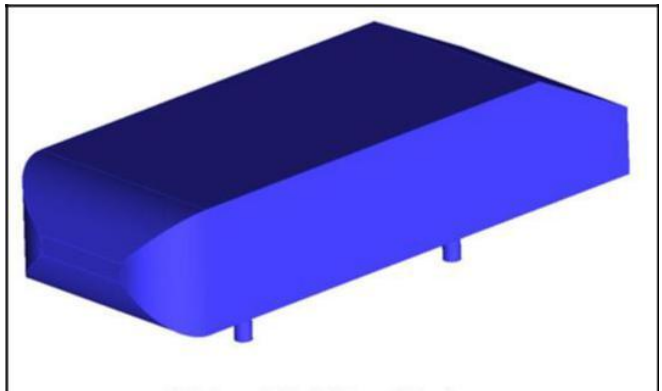
CAD model of Ahmed Body

Mesh generation is a crucial step in computational simulations requiring high quality meshes to accurately catch the complex physical circumstances. High quality along with high density meshes are required to accurately capture the complex physical phenomena but it is computationally costly. Therefore mesh was locally refined in regions that are important and coarser mesh is used at less relevant places to reduce the computational expenditure with sufficient number of grid wanted to be solving the physics correctly. For grid generation Ansys meshing is used.

5.2 CFD Modeling - Boundary conditions

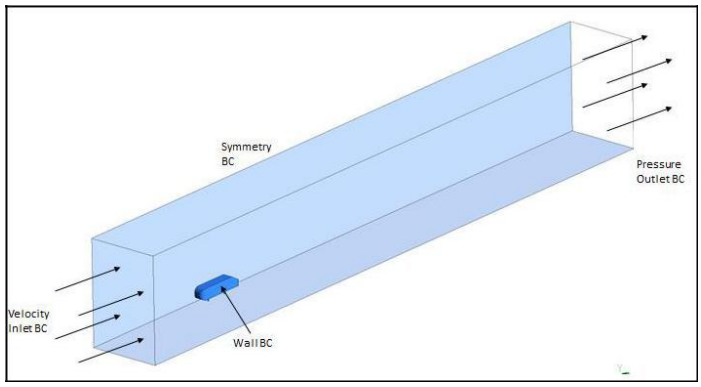

5.3 CFD Modeling – Generation of Grid

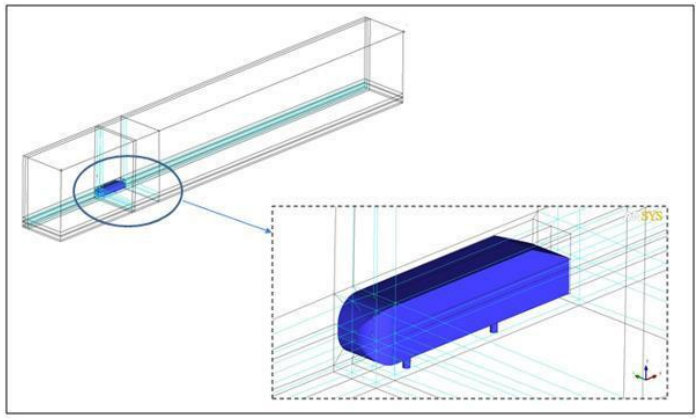

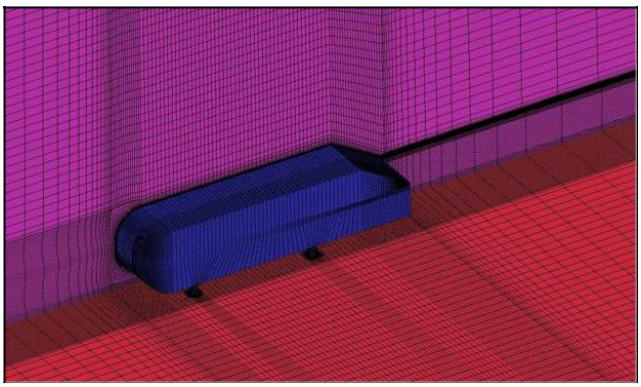

Grid Information-
Total Number of Blocks: 126
Total Number of cells: ~1.5 million

5.4 Grid Independence Study-

In order to obtain a CFD simulation, independent of grid size, a set of three simulations with different grid size were carried out.

Grid – A: 1,000,000 cells
Grid – B: 1,500,000 cells
Grid – C: 2,000,000 cells

The drag coefficient was estimated for these three grids at flow conditions correspond to Reynolds number = 789,000
The Drag Coefficient was evaluated using the following expression

$C_d = F_d / (2 \rho A V2)$

Where,
C_d = Drag coefficient
F_d = Drag Force, N
ρ = Density of Air, kg/m3
A = Frontal Area, m2
V = Free-stream velocity m/s

	Cd
Grid A	0.308
Grid B	0.284
Grid C	0.283

From the table, the difference in drag coefficient between Grid B and Grid C was negligible. So, the grid sizing from the Grid B was used for the remaining simulations.
The Ahmed body validation was carried out by varying the rear-ramp angle.

1. Validation Case 01 – Ramp Angle = 25 degree
2. Validation Case 02 – Ramp Angle = 35 degree

6. REAR SLANT ANGLE VARIATION VALIDATION CASE

6.1 Validation Case-01

Drag coefficient variation over the Reynolds Number variation for the Ahmed Body with the Rear Ramp (Slant) angle of 25 degree had been plotted below.

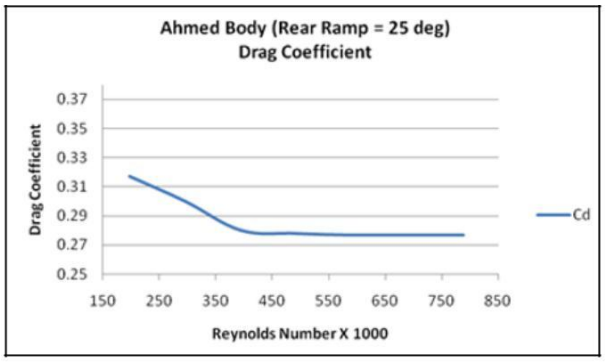

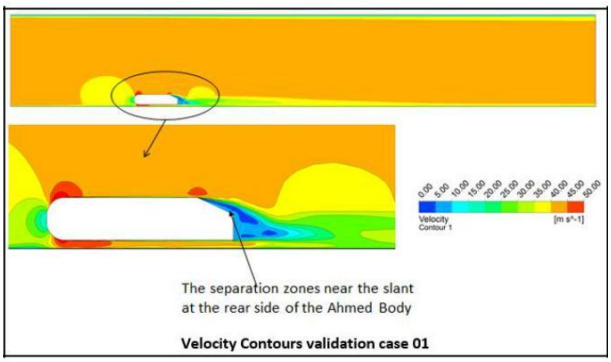

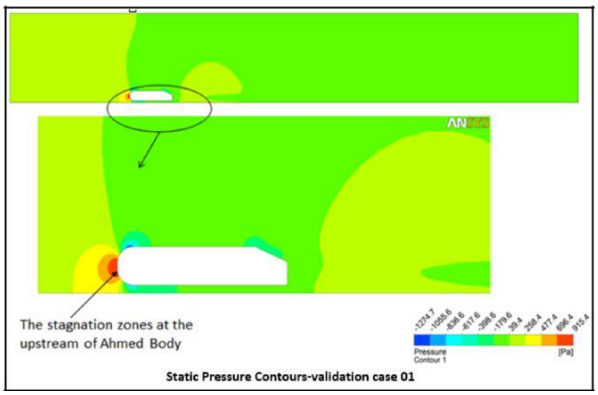

6.2 Validation Case-02

In similar with the Ramp Angle of 25 degrees case, a sharp variation of drag coefficient was observed for the low Reynolds number and remains nearly uniform for the higher Reynolds number cases.

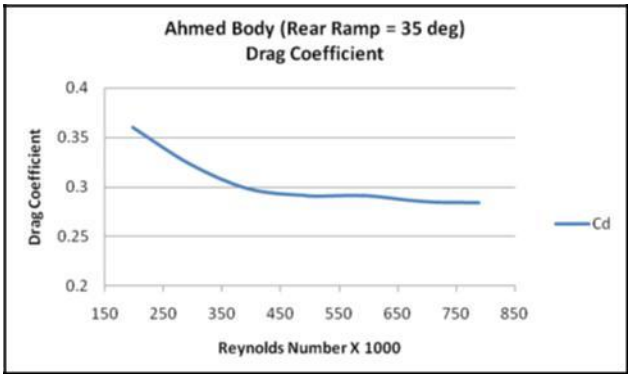

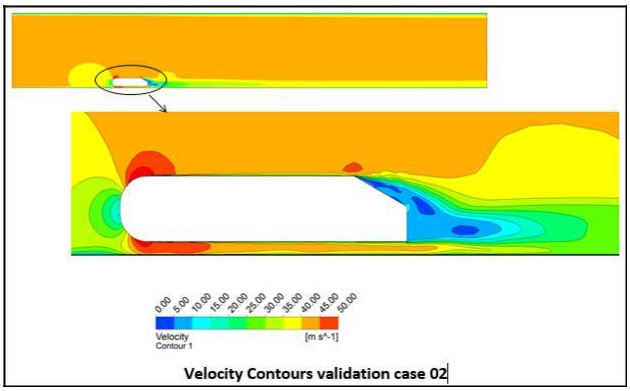

6.3 Result Comparison-

Table- Drag co-efficient

Ramp Angle 35 degree		
Experiment	CFD	% Diffrence
0.264	0.284	-0.8

1. The CFD simulations over predict Drag coefficient by 8%
2. A brief study will be made to identify the potential areas to improve the results to meet the predictions from experiment.
3. Improving grid refinement near the walls for better prediction of Skin-friction drag.
4. Improving grid refinement in the wake region for better prediction of Pressure Drag.

7. CONCLUSION

1. The reduction of vehicle drag for the increase in Reynolds number had been predicted using CFD simulation.
2. Block structured meshes prevented the numerical diffusion in the simulations.
3. The drag prediction approach with the help of Reynolds Averaged Naiver Stokes (RANS) formulation with two equation model of K-omega turbulence model produced results that were comparable to the experimental data.

REFERENCES

1] J.D. Yau "Aerodynamic vibrations of the maglev vehicle running on the flexible guideways under oncoming wind actions" Journal of Sound and Vibration 329 (2010) 1743–1759

2] Makoto Tsubokura , Takuji Nakashima b, Masashi Kitayama c,Yuki Ikawa , Deog Hee Doh d, Toshio Kobayashi e "Large eddy simulation on the unsteady aerodynamic response of a road vehicle in transient crosswinds" International Journal of Heat and Fluid Flow 31 (2010) 1075–1086

3] Ehab Fares "Unsteady flow simulation of a Ahmed reference body using a lattice Boltzmann approach" Computers & Fluids 35 (2006) 940–950

4] Charles-Henri Bruneau a, Emmanuel Creusé b, Delphine Depeyras a, Patrick Gilliéron c, Iraj Mortazavi a "Coupling active and passive techniques to control the flow past the square back Ahmed body" Computers & Fluids 39 (2010) 1875–1892

5] Daniel G. Hyams , Kidambi Sreenivas, Ramesh Pankajakshan, D. Stephen Nichols, W. Roger Briley, David L. Whitfield "Computational simulation of model and full scale Class 8 trucks with the drag reduction devices" Computers & Fluids 41 (2011) 27–40

6] Eric Serre a, Matthieu Minguez b, Richard Pasquetti c, Emmanuel Guilmineau d, Gan Bo Deng d, Michael Kornhaas e, Michael Schäfer e, Jochen Fröhlich f, Christof Hinterberger g, Wolfgang Rodi g "On simulating the turbulent flow around the Ahmed body: A French German collaborative evaluation of LES and DES" Computers & Fluids 78 (2013) 10–23

7] Emmanuel Guilminea u "Computational study of flow around the simplified car body" Journal of Wind Engineering and Industrial Aerodynamics 96 (2008) 1207–1217

8] Simon Watkins, Gioacchino Vino "The effect of vehicle spacing on the aerodynamics of a representative car shape" Journal of Wind Engineering and Industrial Aerodynamics 96 (2008) 1232–1239

9] Mahmoud Khaled a,b,c, HichamElHage c, FabienHarambat b, HassanPeerhossaini a,d,n "Some innovative concepts for car drag reduction: A parametric analysis of aerodynamic forces on a simplified body" J. Wind Eng. Ind. Aerodyn. 107–108 (2012) 36–47

10] Bahram Khalighi a,n, ShaileshJindal b, GianlucaIaccarin"Aerodynamicflowaroundasportutility vehicle—Computational and experimental investigate on" J. Wind Eng. Ind. Aerodyn. 107–108 (2012) 140– 148