Stress Analysis and Optimization of Car Door Hinge

[#1]N.D.More, [#2]T.A.Jadhav

[1]P.G Scholar, Department of Mechanical Engineering, Sinhgad College of Engineering, Pune, Maharashtra
[2]Associate Professor, Department of Mechanical Engineering, Sinhgad College of Engineering, Pune, Maharashtra

Abstract: Door hinges and latches are door retention system components which plays very important role in automobile as it holds the door of automobile in case of side impacts or rollover accidents. Hinges is the assembly of components connected to the door and body of the vehicle, linked to each other and capable of rotating around the same axis. Latches is a mechanical device employed to position the door in a closed position relative to the vehicle body with provision for controlled release. The standard specific requirements for side door latches and hinges fitted on car to minimize the likelihood of occupants being thrown out of the vehicle as a result of any impact are stated in IS14225:1995 in Indian standards. Initially, CAD model of hinge and latch will be prepared using CATIA. The models of those components will be meshed and boundary conditions will be given by using commercial meshing software Hypermesh. Structural analysis will be carried out using ANSYS. In order to validate the results of FEA, experimental analysis will be carried out on existing model. Based on the results further optimization of the component will be carried out and Structural analysis will be carried out using ANSYS on optimized component.

Keywords: Car Door Hinge ,FEA Experimentation, optimization.

1. INTRODUCTION

Door hinges allow car or truck's doors to open and close and also hold door in closed position to the vehicle. They are located where the door attaches to the frame. There are two hinges for each door, an upper hinge and a lower hinge. Inside the hinge there is a circular pin that allows the hinge to swivel around pin axis. Car door latches and hinges are door retention components. Hinge is a assembly of components connected to the body of the vehicle and door, linked to each other and capable of rotating around the same axis. Now a days two positioned latch system is provided for the car locking. First is fully latched position and other is secondary latched position.

The first task is to estimate the number of rollover fatalities that would occur in a typical year if all cars on the road were built with previous technology. Based on a review of National Automotive Sampling System (NASS) and Fatality Analysis Report System(FARS) data from 1995-2003, On an annual basis there were 5,023,879 vehicle occupants involved in vehicle crashes. Occupants ejected from vehicle wore 54,082. Refer Table 1. In ejections in which the route of ejection is known, 59 percent of those ejections occurred through side glazing and 26 percent of those ejections occurred through openings other than side glazing or doors (i.e. , convertible tops, sunroofs, windshields, open truck beds). The remaining, 15 percent of those ejections occurred through a vehicle door. The rate of ejections through doors is heavily dependent on seat belt use of the occupant. 94 percent of ejections through doors involve unbelted occupants.

Even though it seems like very few in numbers which is 54,082 people (1.08%), i.e. very few people were killed because of opening a door due to impact and got killed but still it is very important. Because life is precious thing. We have to save life in any ways.

Federal Motor Vehicle Safety Standard 206 and Indian standard IS:14225 "specifies requirements for side door locks and side door retention components including latches, hinges, and other supporting means, to minimize the likelihood of occupants being thrown from the vehicle as a result of impact". Already in the early 1960's, occupant ejection was known to be the main cause of deaths in rollovers and a serious problem in other crash modes a well.

Table 1. Total Ejections: 1995 to 2003 NASS and FARS report, on an Annual Basis

	Total Occupants	Unejected	All Ejection
All Crashes	5,023,879	4,969,797	54,082
Rollover	444,267	410,420	33,847
Non-rollover	4,579,612	4,559,377	20,235

1.1. Objective

The objective of the study is to optimize door hinge under various loading conditions by finding stresses and

deformation. This optimized model will have better performance.

- To perform structural analysis using linear static method of FEA.
- To identify areas of component for improvement.

To suggest suitable alternatives to design for enhancement of strength or mass reduction

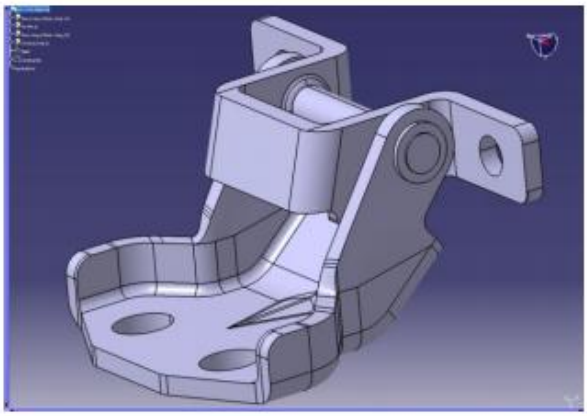

Fig.1 : CAD Model of Door Hinge

2.2 Material Selection

Three important criteria for the selection of materials are mechanical, chemical and physical properties. There are several materials used for manufacturing of Door Hinge such as S.G. iron (ductile iron), aluminium and mild steel. We selected mild steel as per its properties and availability. SAE Grade 1008.

Table 2. Physical and mechanical properties of mild steel

Young's Modulus	210 Gpa
Density	7850 kg/
Poisson's Ratio	0.3
Yield Strength	285Mpa

2.3 Meshing

In this stage .igs file is imported to the meshing software like Hypermesh. The CAD data of the Door hinge structure is imported and the surfaces were created and meshed. Since all the dimensions of Door hinge are measurable (3D), The meshing of component is done in tetra-hedral element, because it is the best element for the meshing.

2. Finite Element Analysis of Door Hinge

2.1 Designing a CAD model

CAD model of hinge was developed in 3D modelling software CATIA V5. It consist of Door side bracket, Body side bracket and Circular pin.

Number of nodes= 13613
Number of elements= 49776
Element size = 4 mm

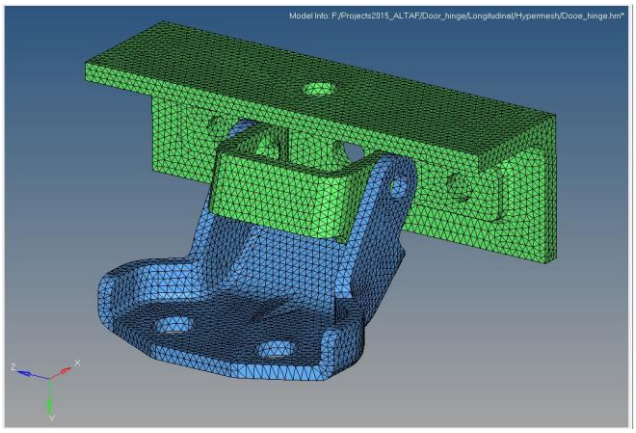

Fig.2 : Meshing of Door Hinge

2.4 Force Selection for Door Hinge

Forces are taken from the Indian Standard IS 14225:1995 Automotive vehicles-locking systems and door retention components - general requirements, Bureau of Indian standards. Each door hinge system shall support the door and shall not separate when a longitudinal load of 11130 N is applied. In transverse load condition, each door hinge system shall support the door and shall not separate when a transverse load of 8930 N is applied.

2.5 Boundary Conditions

Longitudinal Load:

The tensile force shall be applied equidistant between the linear center of the hinge pin and through the centerline of the hinge pin in the longitudinal vehicle direction. A door hinge assembly, when tested shall be able to withstand an ultimate longitudinal load of 11130 N in the closed position.

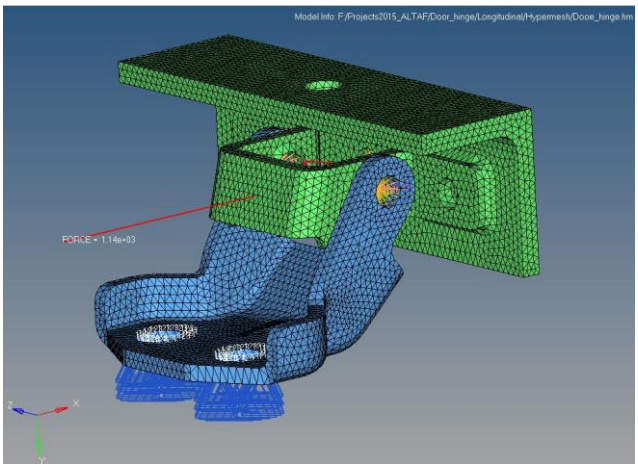

Fig.3 : Longitudinal force on Door Hinge

Transverse Load:
The tensile force shall be applied equidistant between the linear center of the hinge pin and through the centerline of the hinge pin in the transverse vehicle direction. A door hinge assembly, when tested shall be able to withstand an ultimate transverse load of 8930 N in the closed position.

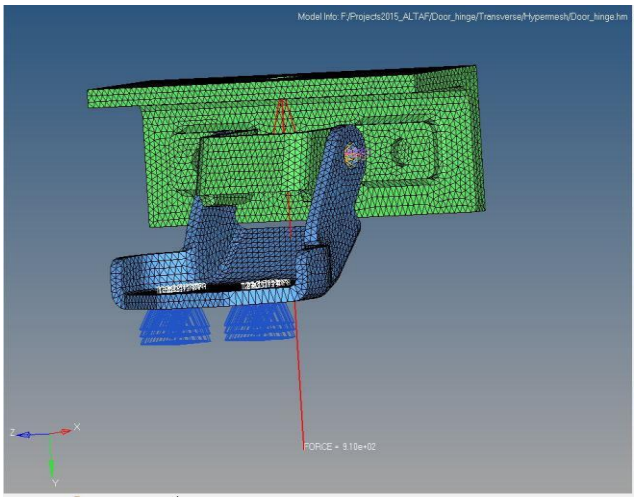

Fig.4 : Transverse force on Door Hinge

3. FEA Results

For Longitudinal Load:
To observe maximum stress produce into Door Hinge in longitudinal direction, model is subjected to extreme conditions and stress analysis is carried out in Ansys APDL.

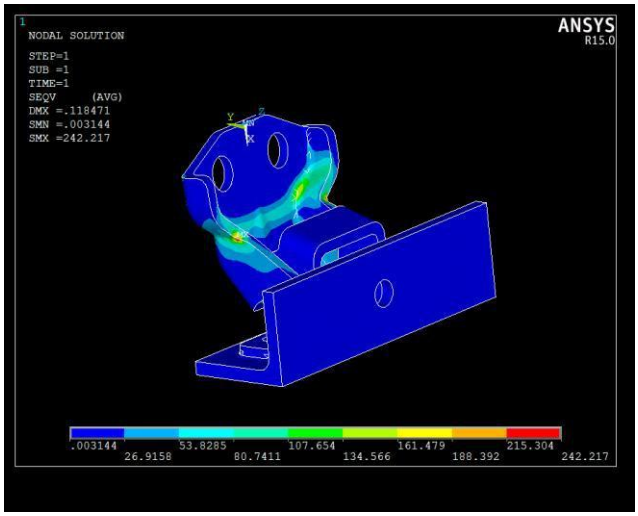

Fig.5 : Stress Induced in Door Hinge in Longitudinal Load

For Transverse Load:
To observe maximum stress produce into Door Hinge in transverse direction, model is subjected to extreme conditions and stress analysis is carried out in Ansys APDL.

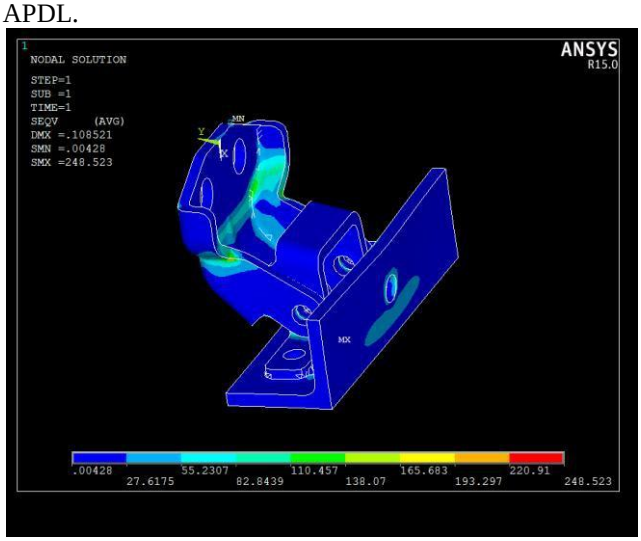

Fig.6: Stress Induced in Door Hinge in Transverse Load

By static analysis of Hinge under extreme conditions
Max. Deformation: 0.118 mm
Max. Stress produced: 248.5 MPa
As stresses are well within the limit of yield stress (340MPa) and deformation is much less, so design is safe.

4. Experimental analysis

Experimental tests are carried out on existing model to validate FEA results. Longitudinal and transverse load is tested on UTM (Universal Testing Machine) and Displacement verses Load curves are plotted.

Procedure:
1. Attach a test fixture to the mounting provision of the hinge.
2. The test fixture is placed in the machine between the grips. The machine itself records the displacement between its cross heads on which the specimen is held.
3. Adjust the load cell to read zero on the computer up to peak load. Once the machine is started it begins to apply an increasing load on specimen.
4. Throughout the tests the control system and its associated software record the load and displacement of the specimen.
5. According to results of experiment, graph of the displacement variation with load is plotted automatically.

Longitudinal load

Fig.7 : Load vs Deformation Graph for Longitudinal Load

Transverse Load

Fig.8 : Load vs Deformation Graph for Transverse Load

5. Conclusion

This paper has been focused on maximum stress and maximum displacement induces in the door hinge assembly. Forces acting on door hinge are taken from IS14225:1995 standards for door retention component. 3D model of component is produced and analysed. also to validate results of analysis experimental analysis was carried out.

In a three dimensional analysis of component stresses are applied in longitudinal and transverse direction of component. In longitudinal load condition, maximum stresses are found to be 242.21 MPa. In transverse load condition, maximum stresses are found to be 248.523Mpa.

Maximum displacement of component in both, FAE and Experimental analysis are shown in table 3.

Table 3: Validation Results for Existing model

S. No	Results	Transverse Deformation	Longitudinal Deformation
1	FEA results	0.108	0.118
2	Experimental results	0.116	0.128
3	Error	7.4%	8.5%

Results of the analysis in this paper could serve as a base to optimize door hinge. As we seen in results of analysis, door hinge deformations are well below the limit and the working stresses are less than the ultimate stress of material. Based on these results we can conclude that, There is a scope for further optimization of door hinge.

References

[1] NHTSA Technical Report, "An Evaluation of Door Locks and Roof Crush Resistance of Passenger Cars", Federal Motor Vehicle Safety Standards 206 and 216, November 1998.

[2] NHTSA Technical Report, "Lives Saved by the Federal Motor Vehicle Safety Standards and Other Vehicle Safety Technologies", 1960-2002, October 2004.

[3] BUREAU OF INDIAN STANDARDS, Automotive vehicles - locking systems and door retention components - general requirements, 2000.

[4] 6,053,543 United States Patent, April 25, 2000, Vehicle door latch, 2000.

[5] SAE J934, Legal Standards, Recommended Practice For A Vehicle Passenger Door Hinge System - Society of Automotive Engineers, 49 CFR 571.201.

[6] SAE J839, Legal Standards, Recommended Practice For Passenger Car Side Door Latch Systems - Society of Automotive Engineers, 49 CFR 571.201.

[7] Portillo, Oscar, Dobson and Kimberly, "Load analysis of automotive door latches", F2008SC-033, 2008

[8] www.nhtsa.gov/cars/rules/rulings/DoorLocks/DoorLocks_NPRM.html