Experimental and Numerical Investigation of Optimum Path and Speed Search for a Bike

#1Sachin Pawar, #2Dr.D.S.Watvisave

[1] PG student, Automotive Engineering, Mechanical Engineering Department, Savitribai Phule Pune University, Pune, Maharashtra, India.

[2] Associate professor, Mechanical Engineering Department, Savitribai Phule Pune University, Pune, Maharashtra, India.

Abstract: Now a day's Artificial Intelligence (AI) and IOT (internet of things) are continuously working on vehicle to make it safe and smart. Recently Google developed a driverless car with use of machine learning, Artificial intelligence and sensors. Aim of this paper is to develop a system which continuously monitor and gather data from ultrasonic sensors which are mounted on front end, back end and side of vehicle. Ultrasonic sensors are used here because it's cheap and precise. The ultrasonic sensors continuously measure distance between sensors and obstacles or other vehicles. By continuous monitoring we get a reading in the excel sheet with traffic conditions which will be analyzed and safe speed and optimized path will be calculated. After that by using machine learning we train raspberry pi board with deep learning approach. This safe speed will help driver to drive vehicle safely within speed limits on road.

Keywords: raspberry pi, python, machine learning, artificial intelligence, automation

1] Introduction

IBM recently developed IOT technology for automotive, which allow all internet connected vehicles, shops, manufacturers and other devices to talk to each other using a common language for diagnostics, analysis, storage of data and then this data is further processed for better solution and improvement of product. Automation, IOT, Artificial intelligence are continuously working in automotive industry to reduces the errors, human efforts, increases the performance of vehicle and make vehicle smart by making use of various sensors, actuators and technologies. Recently Google developed a driverless car that can drive by their own without human assistance. It uses different types of sensors, actuators and networks to run a car just like a human drive. The advantage of automation is that it reduces the accidents caused by human errors. Automation can prevent the accident from being happened. Due to automation the vision of vehicle increases that is some technologies can do such a thing that a human cannot do for example pedestrian detection during night. This paper describes how the proposed system helps driver to drive safely. If a vehicle come very close to our vehicle then buzzer starts ringing which alerts driver and driver will apply brake and similarly during parking if obstacle is there buzzer will alert the driver. This paper also aim towards collecting Traffic data which will help driver to drive vehicle safely.

The existing techniques used for safety measure and accidents prevention are Emergency braking systems

2] Literature review

(EBS), traction control and stability control. This is technologies use different sensors and very complicated systems. different sensors have different characteristics, IR sensor is non linear in characteristics. Different surfaces act differently some surfaces reflect and some absorb infrared energy. Hence it is very difficult to measure distance of such objects (c. grover et al,2008).

Recently Google developed a driverless car by making use of various sensors and software's. this car uses a 3d sensor known as Lidar to know what's around it and using artificial intelligence vehicle make decision what to do next. they used various sensors to monitor all vehicle activity such as monitoring engine, lane detection, pedestrian detection, traffic sign detection, etc. by continuously monitoring all this parameters computer is able to take its own decision while driving (Geetinder Kaur et al, 2014).

Widely used sensors that are mainly used for the measuring of distances are Ultrasonic sensors (US). Since this are cheap and precise compared to other sensors and are more reliable. As ultrasonic sensors are not vision-based they can be used very effectively under the conditions of poor lighting and objects which are transparent in nature. Ultrasonic sensors work on sound waves hence only problem with this sensor is tilted object does not reflect back the sound waves or sometimes take more time to receive signal hence wrong distance is get measured(A. K. Shrivastava et al, 2010).

In the last decades in the field of automotive a large interest has been given to issues such as improving safety conditions, optimizing the exploitation of transport networks, reduce energy consumption and preserving the environment from pollution. a review paper has been developed by Massimo Bertozzia Alberto Broggib, et al on Vision -based intelligent vehicles: State of the art and perspectives to overview the challenges in making vehicle autonomous and benefits of making it autonomous(Massimo Bertozzia et al, 2000).

Pulkit Leekha, et al developed a Advanced driver assistance systems (ADAS) to automate or enhance vehicle systems for safety and better driving. Safety features are designed to avoid collisions and accidents by offering technologies that alert the driver to potential problems, or to avoid collisions by implementing safeguards and taking over control of the vehicle, this system is developed using raspberry pi, ultrasonic sensors, HD camera,etc.this system will help driver to avoid collision either by warning or taking command on vehicle (Pulkit Leekha et al, 2015).

3] Related Work

Wan-Joo Park, Byung-Sung Kim, et al. developed a system for detecting parking space for vehicle using ultrasonic sensors. In this project they used ultrasonic sensor and calculated its accuracy in different conditions. Parking is considered for a driver to be the hardest when driving a car because parking is a high-stress maneuver. This paper deals with parking space detection by using ultrasonic sensor (Wan-Joo et al, 2008).

Shrikant s and vinod kumar developed automatic speed breaker warning and brake actuation system for automobiles. Here they have used zigbee system as transmitter and receiver. During night driving drivers are not able notice speed breaker placed on the road. The system gives the driver a warning signal of approaching speed breaker and apply brakes to slow down to predefined speed so that vehicle can pass speed breaker without being damaged by speed breaker. Here they have used 8051 microcontroller. Sensors mounted on bumper of vehicle which continuously monitor change in distance, if distance fall below 50m the system warns the driver. After giving 3 buzzer warning system automatically applies brake (Shrikant s and vinod kumar, 2015).

3] System structure

3.1 Hardware description

3.1.1 Raspberry pi mod b+

The Raspberry Pi is a credit card-sized single-board computer. There many boards available in market but for project we choose raspberry pi mod b+ which has 40 GPIO pins,4 USB 2.0 ports.

Figure 1 : Raspberry pi mod b+

It has low power consumption between 0.5W to 1W.it has Broadcom processor BCM2836 of 1000hz capacity and come with 512MB RAM. Raspberry pi is a small sized computer capable of doing various tasks at a time

3.1.2 Ultrasonic sensor

We are using HC-SR04 Ultrasonic transducer because it has range of 4cm to 4m.and takes 0.2ms to find out distance and it is more accurate than other sensors.

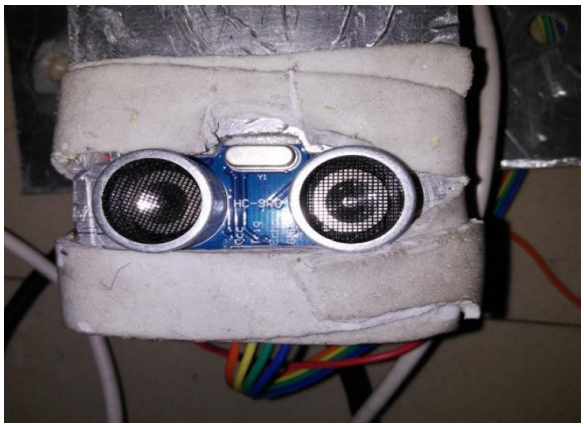

Figure 2: ultrasonic sensor module

This sensor send a ultrasonic sound wave and receiver receive the reflected wave. The time required for sound wave to come back to receive after transmitted from transmitter givers us the distance between object and sensor.

3.1.3 *Power bank*

Power supply to raspberry pi is given by a 5000 mah power bank which has output of 5V and 1A which we require.

3.2 Software description

3.2.1 Raspberian OS

Raspbian is a free operating system based on Debian optimized for the Raspberry Pi hardware. It comes with easy installation. Features of Raspbian include:

i. Created specially for RPi hardware
ii. Support headless setup (without monitor display)
iii. Easy to understand

3.2.2 Python language

Python is a very powerful and easily programmable language. it is capable of performing various tasks with ease

3.2.3 Numpy

NumPy is the fundamental package for scientific computing with Python. It contains among other things a powerful N-dimensional array object, sophisticated (broadcasting) functions,tools for integrating C/C++ and Fortran code and useful linear algebra, Fourier transform, and random number capabilities

4] System implementation

Figure shows a hardware connection made to perform the task. Two ultrasonic sensors are connected to raspberry pi board via jumper wires and resistors are provided in case something went wrong raspberry pi board will not damage. We have 440k and 1k resistor for each sensor

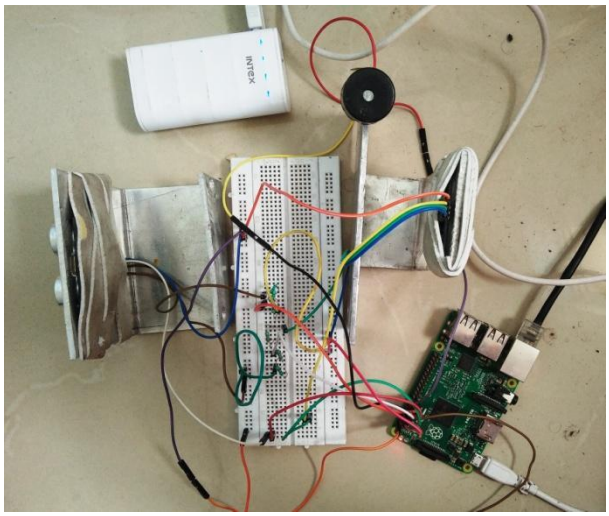

Figure 3: experimental setup

Figure 3 shows experimental setup of this project. Here two ultrasonic sensors and one buzzer is connected to breadboard. Power to raspberry board is provided by a power bank having output voltage 5V.power is supplied by a 5000 mah power bank. During test raspberry pi board and breadboard were placed in a space below seat of bike in an enclosed box. Power is supplied by power bank which is placed in the battery bay. Above fig 3 shows experimental setup off-board.ultrasonic sensors are mounted on front and back number plate of bike.jumper wires are used to connect the breadboard with ultrasonic sensor and breadboard with raspberry pi.

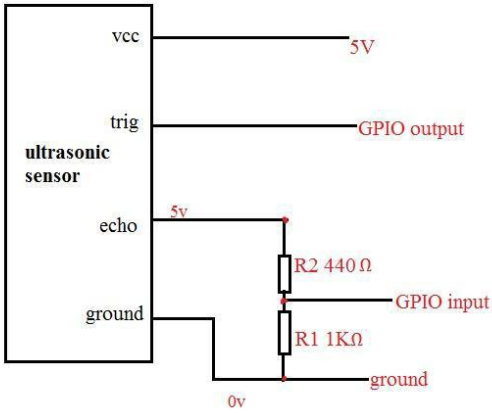

Figure 4: circuit diagram of US sensor and pin configuration with raspberry

Figure 4 shows circuit diagram of US sensor and its configuration with GPIO(general purpose input output) pins of raspberry board.US sensors are mounted on front and back number plate of bike.

5] Working

This whole system works on a python program which is stored in a SD card of raspberry pi. raspberry pi is an onboard computer which can run the script as per our requirement.

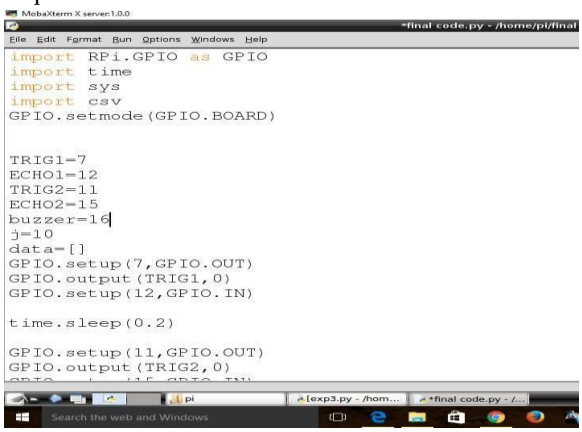

```
import RPi.GPIO as GPIO
import time
import sys
import csv
GPIO.setmode(GPIO.BOARD)


TRIG1=7
ECHO1=12
TRIG2=11
ECHO2=15
buzzer=16
j=10
data=[]
GPIO.setup(7,GPIO.OUT)
GPIO.output(TRIG1,0)
GPIO.setup(12,GPIO.IN)

time.sleep(0.2)

GPIO.setup(11,GPIO.OUT)
GPIO.output(TRIG2,0)
```

Figure 5: screenshot of python script

In fig 5 python script is shown in this script as we can see GPIO pin are allotted to both sensors. The program is set to take reading every 0.5 seconds. Ultrasonic sensor sends a sound wave, script is made to record the time at which wave sent(t_1) and received(t_2). difference between sent and received times T is

recorded which will be used to calculate the distance between sensor and object from which wave reflected. As we knew that speed of sound in air is 343.2 m/s .we are calculating distance using formula

Distance (D) =T * 17000

By using above formula we get distance in cm. We are taking a drive daily on same time and same route and collecting daily data. this python script creates a excel file with .csv extension.

Table 1:reading taken on road

front	back	time
45.74347	36.34429	Thu May 12 00:15:27 2016
45.784	35.92277	Thu May 12 00:15:27 2016
45.35437	35.66742	Thu May 12 00:15:28 2016
46.59867	35.47692	Thu May 12 00:15:28 2016
47.07694	37.51564	Thu May 12 00:15:29 2016
47.05667	35.83765	Thu May 12 00:15:29 2016
45.81642	36.68475	Thu May 12 00:15:30 2016
45.69483	36.25917	Thu May 12 00:15:30 2016
46.18931	37.13059	Thu May 12 00:15:31 2016
45.76373	37.09412	Thu May 12 00:15:31 2016

Now on this data numerical investigation will be done using onboard computer itself , and it will find out optimum path and speed for vehicle to drive safely. After that whenever we drive on that path again it will show us probabilistic traffic condition and safe speed to drive which we had calculated earlier

6] Expected results

After successful implementation and training of system using machine learning's deep learning approach the system will able to decide optimum speed according to driving condition and optimum path based on its training.

7] Conclusion and future scope

This paper is aim to design a system which continuously monitors the traffic conditions and give driver optimum speed and path for driving vehicle safely. Currently we are taking readings on road, this data will be useful to train the system using deep learning approach. Currently we are using 2 sensors. Now we are adding 2 more sensors to either sides of vehicle. Speed input will be taken either from speedometer of bike or from a sensor which will be mounted on wheel. After taking lot of reading we will train system , so it can take decision by itself on board. which will be helpful for driver to drive vehicle safely within limits and on optimum path. This system will reduce the traffic accidents. This system gives us probabilistic traffic condition and this system will be capable of making its own predictive decision.

This paper can be extended by using existing ABS we can control the vehicle if the vehicle in front of us is too close. Raspberry pi will give command to ABS module to apply brakes if the distance falls below pre defined value and this predefined value will change according to speed of vehicle.

References

c. grover,I knight,F okoro,et al.(2008),automated emergency brake system:technical requirements ,cost and benefits,*published project report,2008*

Geetinder Kaur,Sourabh Joshi2,Jaspreet Kaur,Samreet Kaur(2014), Going Driverless With Sensors,*Ijset*, Volume 2,Pp 298-304

K. Shrivastava, A. Verma, and S. P. Singh(2010), Distance Measurement of an Object or Obstacle by Ultrasound Sensors using P89C51RD2,*IJCTE*,volume 2, pp64-68

Massimo Bertozzia, Alberto Broggib and Alessandra Fasciolia(2000),Vision-based intelligent vehicles: State of the art and perspectives,*ELSEVIER*,pp 1-16 Pulkit Leekha, Saagar Minocha, et al.(2015), Personal Driver Assistance System (PDAS) based on Raspberry Pi,*IJETR*,volume 3,pp 435-440

Wan-Joo Park, Byung-Sung Kim, et al.(2008), Parking Space Detection Using Ultrasonic Sensor in Parking Assistance System,IEEE,pp 1039-1044 Shrikant s and vinod kumar (2015), Automatic Speed Breaker Warning And Brake Actuation System For Automobiles, *ISRASE,*Second International Conference on Recent Advances in Science & Engineering ,pp 1-4