Air Flow Analysis of Air Conditioning Ducts used in Automotive System

[#1]A. D. Deshpande, [#2]A. V. Waghmare

[#12] Mechanical Department, AISSMS Collage of Engineering , Savitribai Phule Pune University, Pune, India.

Abstract— Air conditioning has become one of the most standard options on most vehicles enhancing comfort. Without A/C system, the person feels unhealthy, uncomfortable and inefficient. Modern system feature automatic climate control, integrated cooling, heating, air filtering, humidity control, demisting and defrosting. These system improves passenger thermal comfort and provide the required temperature. The passenger thermal comfort is mainly influenced by the inside cabin temperature. Whereas the cabin temperature depends on the cabin size, shape of duct, number of duct and the total mass flow rate of the total ac system, and it also depends on the material of dashboard, trims and seating's. Normally duct in passenger car have a manual adjustment of vanes to set the airflow direction in the cabin. An attempt has been made to make this duct operate automatically as per the cabin temperature. The ducts are use for the air circulation of air and ventilation. Proper air distribution is being achieved with proper duct design which leads minimum losses in the system, proper fan as a blower and optimum air velocity in duct, inlet and outlet of air. With the CFD simulation and design of various duct that provide a better thermal comfort for passenger. Airflow pattern has been studied and the result of the same are discuss.

Keywords: Automotive air conditioning, Air flow analysis, Thermal comfort, Ducts.

I. INTRODUCTION

The ducts are used for circulation of air and for ventilation. These ducts are commonly used in automobile as well as domestics purposes. Without A/C system, person is feeling unhealthy, uncomfortable and inefficient. In order to achieve the required cooling load, proper method is required. Proper air distribution is achieved with proper duct design which leads to suitable selection of fan with high efficiency, minimum losses in the system, optimum air velocity in duct, inlet and outlet of fan. Today some software's are available to estimate cooling load, to design the duct, to select. The ducts are used due to following some requirements:

The chief requirements of an air conditioning duct system are:

a. It should convey specified rates of air flow to prescribed locations.

b. It should be economical in combined initial cost, fan operating cost and cost of building space.

c. It should not transmit or generate objectionable noise.

Generally at the time of designing an air conditioning duct system, the required airflow rates are known from the load calculations. The location of fans and the air outlets are fixed initially. The duct layout is then made taking into account the space available and ease of construction. In principle, the required amount of air can be conveyed through the air conditioning ducts by a number of combinations. However, for a given system, only one set results in optimum design. Hence, it is essential to identify the relevant design parameters and then optimize the design.

In this research work the computational fluid dynamics of automobile air conditioning duct system proposed to carry out. The different types of air ventilation duct are proposed to study and design for improving the performance.

Priyank Lohiyaet.al [1] has been studied on the numerical study on heat transfer of turbulent duct flow through ribbed duct. Enhancing heat transfer surface can be used in many engineering applications such as gas turbine blade cooling passages (i.e. channel/duct), heat exchanger surfaces, air heater, gas-cooled reactor fuel elements, ventilation equipment of micro-electronic systems and air conditioning/ refrigeration systems, hence many techniques have been investigated on enhancement of heat transfer rate and decrease the size as well as cost of the involving equipment especially in heat exchangers. Rib roughness on the underside of the top wall of a duct has been found to substantially enhance the heat transfer coefficient.

Dr.Naihad et.al [2] carried out the works on the design optimization of the industrial duct using computational fluid analysis. In

© 2015, IERJ All Rights Reserved

this work the different industrial duct is design for maximum efficiency by considering the different parameters. The computational fluid analysis is used for validation of the final results.

Roger M Hensley, carried out the work on the duct system design. In this work the different design of duct and supply system is studied. The goal of this study to offer an overview of the general principles of duct system design and to call attention to some of the special considerations that need to be given to the process to ensure a satisfactory result. The ultimate objective is to provide a dependable system that not only serves the needs of the consumer, but also increases profits for the installing contractor by reducing callbacks.

B.Shivaraman et.al [3] experimental analysis of heat pipe of solar collector with different length to diameter ratio of heat pipe. In this research experimental study is carried on the flat plate collector with different size of heat pipe. The study observed that medium size of heat pipe improves the efficiency of solar flat collector by 68 %.

II. OBJECTIVES OF THE PROPOSED WORK

 Review and study about the ducting system used in automobiles A.C. units and understanding of issues associated with this field.

 Review the area of different techniques or approaches to understand their principles as applied to the subject of study.

 The proposed method which involves following goals:

o Investigate and study different type's parameters responsible for performance of A.C. units in automobiles.

o Investigate and study different techniques/methods/ approaches for analyzing the ducting system in automobiles.

o Create the solution for improving the finding performance improvement in new types duct design.

 Implement the proposed method.

 Analyze, compare, and validate the final results.

III. GENERAL RULES FOR DUCT DESIGN:

1. Air should be conveyed as directly as possible to save space, power and material

2. Sudden changes in directions should be avoided. When not possible to avoid sudden changes, turning vanes should be used to reduce pressure loss

3. Diverging sections should be gradual. Angle of divergence $\leq 20^o$

4. Aspect ratio should be as close to 1.0 as possible. Normally, it should not exceed 4

5. Air velocities should be within permissible limits to reduce noise and vibration

6. Duct material should be as smooth as possible to reduce frictional losses.

IV. SHAPES AND MATERIAL OF AIR DUCTS

While designing duct, the shape (round, rectangular, or flat oval duct) or material (galvanized sheet, aluminum, fiberglass, or other materials) of an air duct, the choices depend mainly on the space available, noise, cost, local customs and union agreements, experience, quality, and the requirements. Flat oval ducts with spiral seams are used because they have fewer sound problems, lower air leakage, and many configurations of wyes and tees available for easier pressure balance. Round ducts also have the advantage of high breakout transmission loss at low frequencies.
For ducts running inside the air conditioned space in automobile applications, metal rectangular ducts are often chosen for their large cross-sectional areas and convenient fabrication. Round ducts are often used . In projects designed for lower cost, adequate duct insulation and sound attenuation, fiberglass ducts may sometimes be the optimum selection.

V. TYPES OF SUPPLY DUCT SYSTEMS

There are several basic types of supply and return duct systems. Any one of the system types, or a combination of different types, can be utilized to fit the needs of a particular structure. The general types of supply duct systems include:

© 2015, IERJ All Rights Reserved

1. Radial system
2. Extended plenum system
3. Reducing plenum system
4. Reducing trunk system
5. Perimeter loop system.

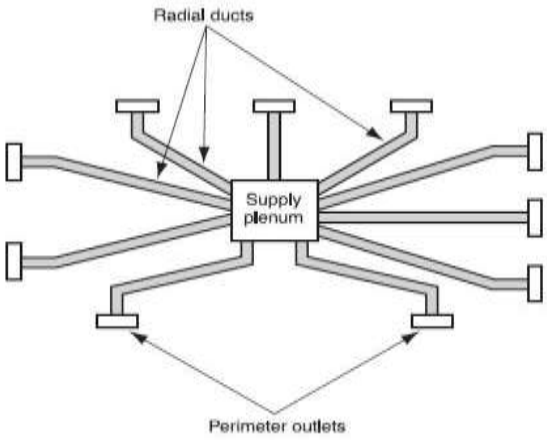

Fig. 1 Radial Duct System

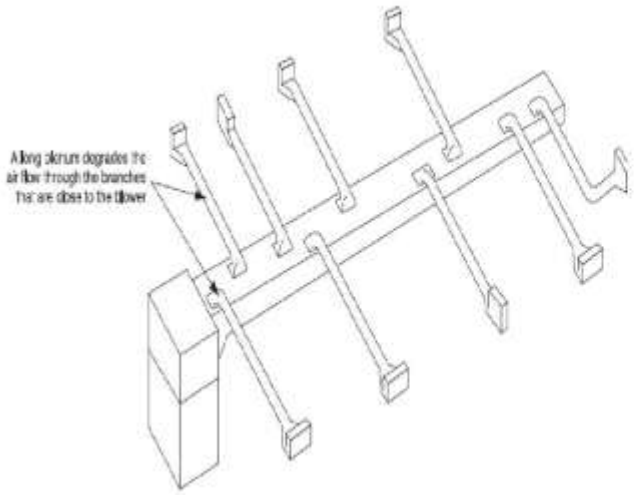

Fig. 2 Extended Plenum system

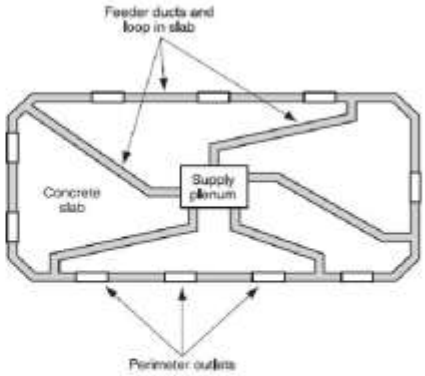

Fig.5 Perimeter Loop System

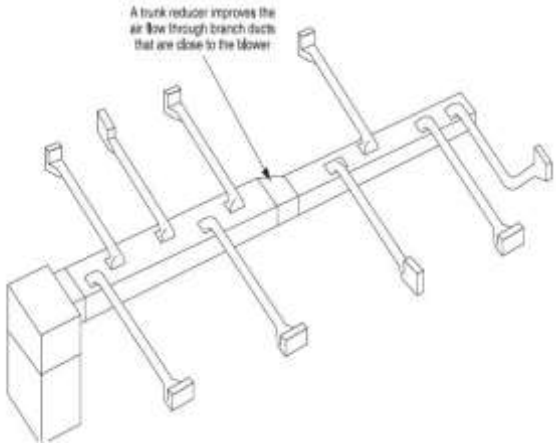

Fig. 3 Reducing Plenum System

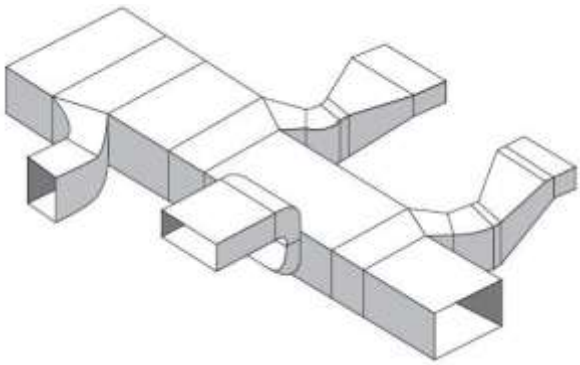

Fig. 4 Reducing Trunk System

© 2015, IERJ All Rights Reserved

1. Classification of Duct Systems on the Application

Ducts are classified based on the load on duct due to air pressure and turbulence. The classification varies from application to application, such as for residences, commercial systems, industrial systems etc. For example, one such classification is given below:

a. Low pressure systems: Velocity ≤ 10 m/s, static pressure ≤ 5 cm H2O (g).

b. Medium pressure systems: Velocity ≤ 10 m/s, static pressure ≤ 15 cm H2 O (g).

c. High pressure systems: Velocity > 10 m/s, static pressure 15<p ≤ 25 cm HO (g).

2. Research Issues in Automobile Duct System

There are many research problems that must be solved to support the implementation of new design of duct system in automobile A.C. unit. The following are some issues associated with existing duct system discuss below:

7.1. Inefficiency of A.C. Unit

• A very common criticism is that automobile AC unit is relatively inefficient.

• Currently, The different ways are adopted for improving the efficiency of automobile AC unit. The used of maximum ducts opening leads to inefficiency.

7.2. System is Bulky

• A.C. and duct system are bulky.

• New technology for optimizing the shape and size of duct are introduced in recent auto industries.

7.3. Cost of Units

• The main hindrance to AC system going widespread is the cost of installing. The capital costs for installing are high.

3. Proposed Ducts Understudy

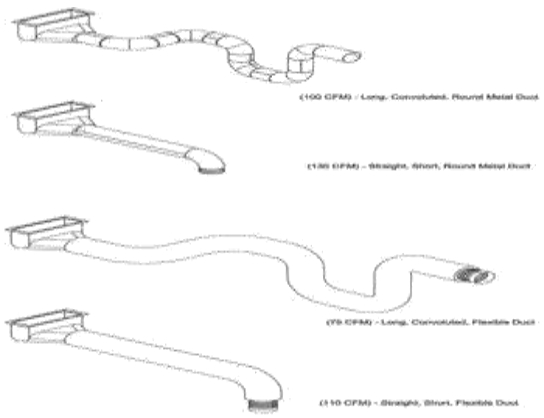

Fig.6 Different types Ducts Design

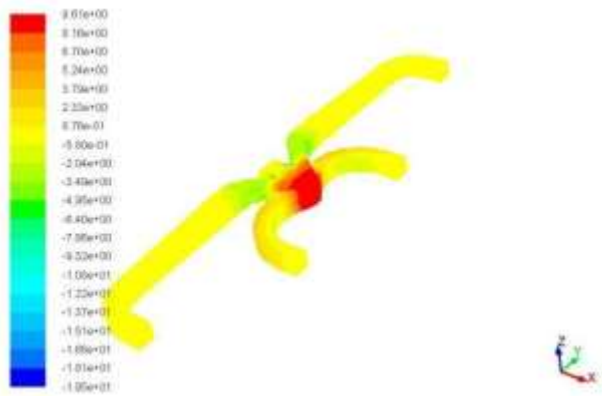

Fig 9. Contours of static pressure

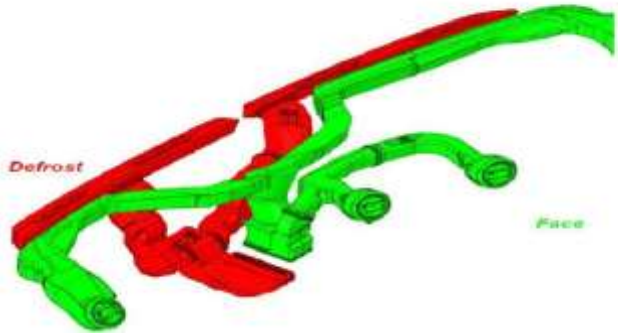

Fig.7 Proposed Ducts Design

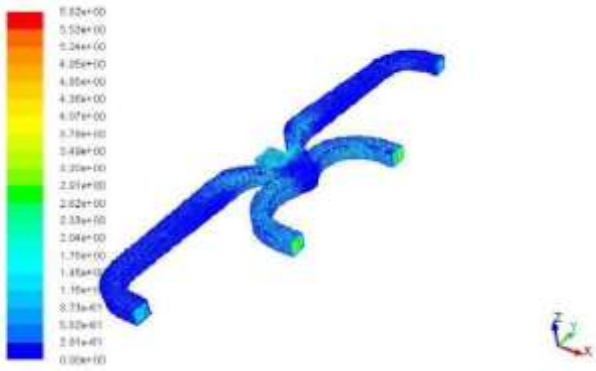

Fig 10. . Contours of velocity magnitude

© 2015, IERJ All Rights Reserved

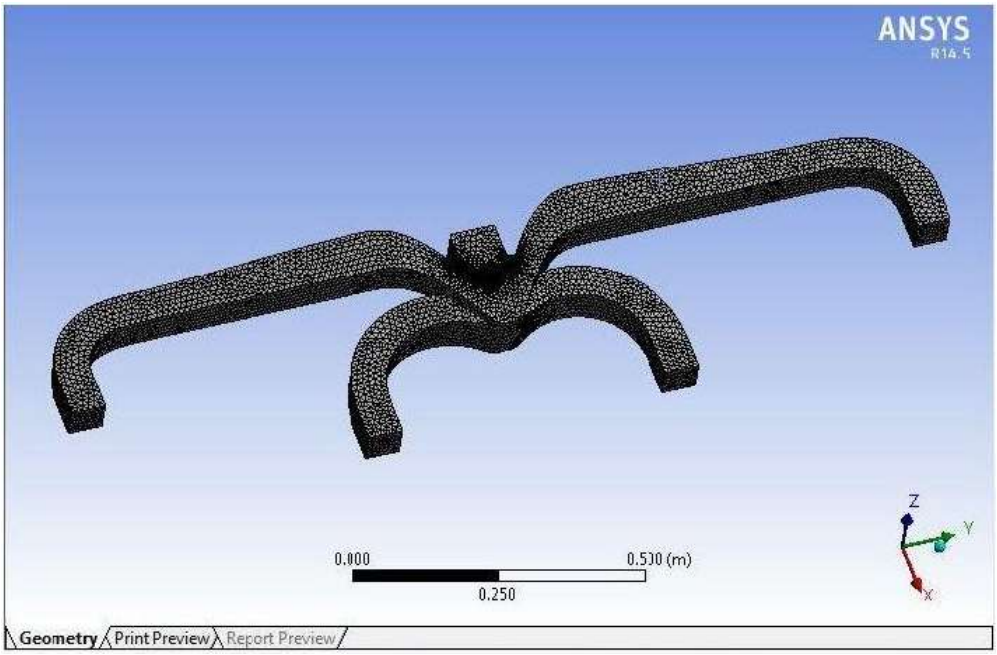

Fig. 8 Meshing of square duct

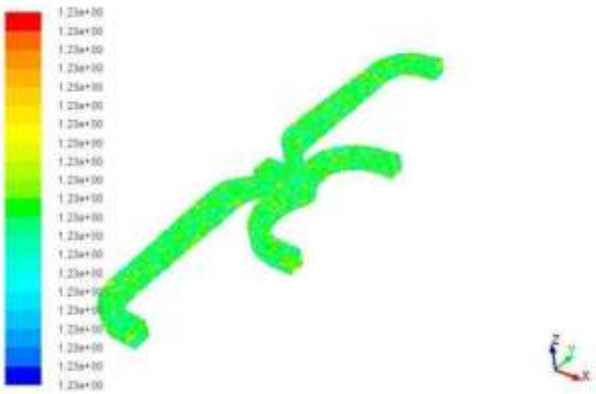

Fig 11. Density

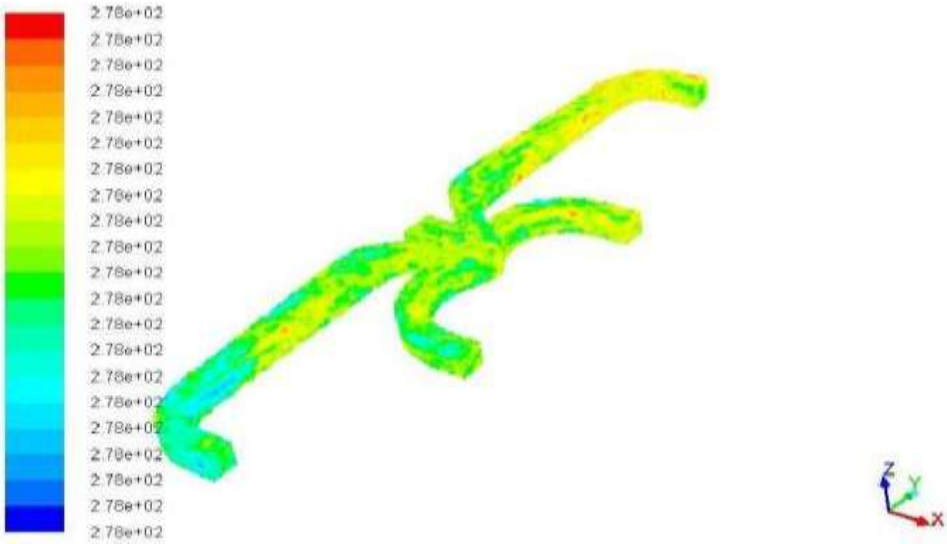

Fig 12. Static temperature.

© 2015, IERJ All Rights Reserved

VI. CONCLUSION

Detailed study of various types of automotive ducts has been done. Thus, an optimized automotive duct has been proposed to increase the overall cooling performance in passenger's compartment. The proposed duct design has better air circulation and ventilation which leads to minimum losses in the system for thermal comfort of passenger. Further study includes the CFD simulation of the designed duct

REFERENCES

[1] Priyank Lohiya, The numerical study on heat transfer of turbulent duct flow through ribbed duct, International Journal Of Engineering Sciences & Research Technology, ISSN: 2277-9655.

[2] Dr.Neihad, Design optimization of industrial duct using computational fluid analysis,Third Int. Conference on the CFD in Minerals and Process Indusries,Austrialla.

[3] Roger M Hensley, DUCT SYSTEM DESIGN CONSIDERATIONS, Refrigeration Service Engineers Society 1666 Rand Road Des Plaines, Illinois 60016,847-297-6464.

[4] [4] Robert Beach and Duncan Prahl,Computational Fluid Dynamics Analysis of Flexible Duct Junction Box Design, Department of Renewable Energy USA, DOE/GO-102013-4297 ,December 2013.

[5] Mukesh Didwania, Analysis of turbulent flow over a 90° bend of duct using in centralized A. C. plant by CFD, IOSR Journal of Mechanical and Civil Engineering (IOSR-JMCE) e-ISSN: 2278-1684,p-ISSN: 2320-334X, Volume 11, Issue 4 Ver. I (Jul-Aug. 2014), PP 41-48.

[6] Vikrant Tapas, Two-Dimensional Computational Analysis of Turbine Blade Cooling Duct, International Journal of Emerging Technology and Advanced Engineering Website: www.ijetae.com (ISSN 2250-2459, ISO 9001:2008 Certified Journal, Volume 4, Issue 10, October 2014.

[7] Raviraj Gurav, Duct design using equal friction method & CFD,I-CORT 2012,Int.Conference on the recent Technology.

[8] Lasse Christoffersen, David Söderblom and Lennart Löfdahl, Optimizing the Cooling Air Flow of a Formula Car using CFD, EASC 2009 4th European Automotive Simulation Conference Munich, Germany 6-7 July 2009.
[8]

[9] Jinliang Yuan,Three-dimensional computational analysis *of gas and heat transport phenomena in ducts relevant for anode-*supported solid oxide fuel cells International Journal of Heat and Mass Transfer 46 (2003) 809–821.

[10]Signato,J.J.W., "A High Velocity, Low Pressure Air System", ASHRAE Transactions ,1980, Part I , PP.180-200.

[11] Kim, Taecheol.,and Spitler, J.D.,"Optimization of VAV Duct System", ASHRAE transactions 2002, vol.108, part-I, pp. 96-104.

[12] Small,Mauro.,"Non-Iterative Technique for Balancing an Air Distribution System" Thesis of Master of Science, Feb.2002 ,pp.1-40.

[13] Dr. Ghate., K,Sudhakar., and Majumdar,P.M., "3-D Duct Design Using Variable Fidelity Method"CASDE, Powai ,Mumbai, pp.1-11.

© 2015, IERJ All Rights Reserved