Dynamic Analysis of Multi-lobe Hydrodynamic Journal Bearing

[#1]G. H. Lanjewar, [#2]D.Y. Dhande

[#12]Mechanical Department, AISSMS College of Engineering, Savitribai Phule Pune University, Pune, India

Abstract— The dynamic coefficient (Stiffness and damping) depends on the geometry, speed of operationand loading of journal bearing. With a goal of calculation and validation of bearing parameters along with stiffness and damping coefficients, a theoretical approach is proceeded which will be followed by analytical and experimental verification of the result obtained. After obtaining film thickness for each lobe at various eccentricity ratios the modified Reynolds equation would be used to obtain the pressure, reaction forces and dynamic coefficients of hydrodynamic Multi lobe journal bearing. A theoretical calculation of validated film thickness for three lobe bearing is presented which would be followed by pressure as well as stiffness and damping coefficient calculation and its validation.

Keywords: Multi-lobe Journal bearing, Film thickness, Pressure Distribution, Stiffness Coefficient, Damping Coefficient

I. INTRODUCTION

Hydrodynamic journal bearings are basically self-acting journal bearings in which a plain cylindrical shaft rotates inside a static bush or shell which surrounds the shaft with a layer of lubricant in between. Basically hydrodynamic journal bearings are applicable for high speed operation purpose. An un-grooved bush with a shaft rotating in it is simplest form of journal bearing and is old form of the journal bearing which have been replaced by various new configuration of journal bearings like two lobe, three lobe, tilting pad enhancing the dynamic performance and stability. Lubricant will be drawn into the gap between the journal and bearing surface, as there is relative motion between them, and forces to squirt out the bearing while the gap is converging. In hydrodynamic bearings oil film thickness is always a function of angular position around the bearing starting from minimum gap to maximum gap. Relative motion draws the oil into converging wedge, the pressure increases and as relatively incompressible oil is forced out of the sides of the bearing. The load imposed by the shaft is supported by the self-generated pressure around the bearing. Pressure will attempt to decrease where the film thickness diverges. For better cooling purpose of journal bearing at high temperature an oil groove at half the bearing length is used in circumferential grooved bearing but the bearing is divided into two parts reducing the load carrying capacity. The Cylindrical bearings with two axial oil feed grooves at the split are used in turbines. For bearing stability pressure-dam bearing is used. For vertical and high speed applications tilting pad is the most common type of bearing featuring self-alignment and inherent stability when used with spherical pivots, also offers greatest increaser in fatigue life. A journal bearing offers infinite life till it loses the oil film at the cost of lack of lubrication or excessive force, when using hydrodynamic lubrication.

Properties like stiffness and damping, maximum load capacity, and decrease in power can be improved by using lobed bearing. By varying the lobe profile the optimum operation of bearing can be achieved along with improved stability at higher speed. With addition of lobe in plain journal bearing results in bearing of several times more shock load, in case of proper oil supply noise and wear free operation with more service life, centered shaft position, good cooling effect and low friction losses are the advantages over plane bearing.

II. LITERATURE SURVEY

Boualem Chetti [1] have studied the effect of micropolar fluids on the performance of three-lobe hydrodynamic journal bearingby developing a modified Reynolds equation using micropolar lubrication theory and solved using finite difference method. Comparing the obtained parameters like damping and stiffness coefficients with the Newtonian fluid showed that better stability is achieved with micropolar fluids. He explained the geometry of three lobed bearing which is used as reference for calculation for film thickness in each lobe in current study.
In another journal Boualem Chetti [2] has proposed the effect of couple stress lubricants on the static and dynamic performance of four-lobe journal bearing. With the same kind of modeling in [1] he derived the equation for film thickness in terms of attitude angle and eccentricity ratio for four-lobe. Couple stress lubricant has been observed to be increasing the performance of four lobe journal bearing over Newtonian fluid.

Dr. B. S. Prabhu [3] has presented mathematical modeling of hydrodynamic journal bearing for calculation of bearing characteristics. Five equations of pressure are obtained from Reynolds equation which gives pressure in the bearing, and when integrated further gives reaction forces and coefficients in journal bearing. For various bearing configuration and length to diameter ratio of journal bearing stiffness and damping coefficients are calculated.

The relation between equilibrium attitude angle and eccentricity ratio has explained by Dr. Luis San Anders [4] which can be used to assume the attitude angle for thee lobe bearing calculation in this study. He also gave mathematical solution for plain hydrodynamic journal bearing in calculation of bearing characteristics and stability analysis of rotor system.

J.W. Lund and K.K. Thomsen [5] presented a numerical method to calculate the dynamic coefficients of oil lubricated bearing and a tabulated data as result is presented for three-lobe bearing, this can be used as data table for comparison of results obtained in current study. A theoretical methodology is presented in this study.

The static characteristics of highly preloaded three-lobe journal bearing is presented by David V. Taylor[6].Maximum pressure occurred in the region of minimum film thickness is verified. The test rig used contains static loading system as well as dynamic loading system on a fixture. Measured pressure and film thickness profiles are shown as result. The results from the measured dynamic characteristics are presented as scatter chart by David V. Taylor[7], showing the uncertainty of the obtained values under a range and minimum of 17% for stiffness and 15% for damping.

C. Bhagat and L. Roy [8] considered the effect of cavitation, groove geometry, shaft speed and recirculation of lubricant and presented a thermo-hydrodynamic analysis of multi lobe hydrodynamic journal bearing. Results are presented in dimension less form as design data. In comparison of two three and four lobed bearing three lobe bearing has highest load carrying capacity and maximum pressure.

Zhi Li [9] has proposed Fourier analysis of three lobe journal bearing. Here the coupling effect and inherent relevance is taken into account instead of considering each lobe separately. Pressure profiles obtained are similar for each lobe i.e. maximum pressure for each lobe is same.

III. MATHEMATICAL MODELING

The diagram below shows the lobe geometry for thee-lobe journal bearing. The bearing is loaded in -y direction.

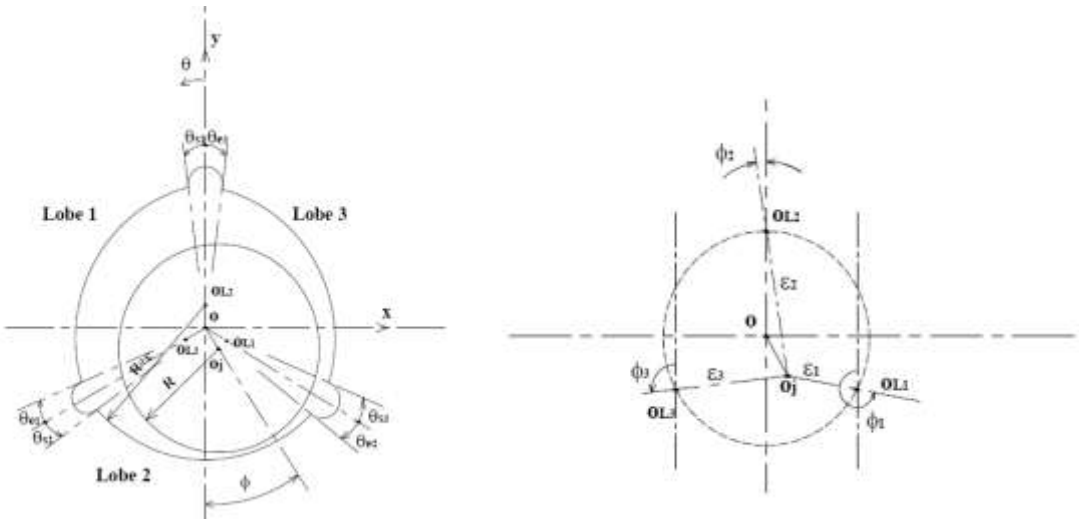

Fig.1 Lobed bearing geometry

As we know that film thickness of each lobe is function of attitude angle, ϕ and eccentricity ratio,ε the following expressions are used to calculate film thickness for each lobe. For lobe 1,2,3 OL1,OL2,OL3 are lobe centers respectively. For individual lobes of three-lobe bearing

$$\varepsilon_1 = \sqrt{\varepsilon^2 + \delta^2 - 2\varepsilon\delta\cos\left(\frac{\pi}{3} - \phi\right)}$$

$$\varepsilon_2 = \sqrt{\varepsilon^2 + \delta^2 - 2\varepsilon\delta\cos(\phi)}$$

$$\varepsilon_3 = \sqrt{\varepsilon^2 + \delta^2 - 2\varepsilon\delta\cos\left(\frac{\pi}{3} + \phi\right)}$$

$$\phi_1 = \frac{4\pi}{3} + \sin^{-1}\left[\frac{\varepsilon}{\varepsilon_1}\sin\left(\frac{\pi}{3} - \phi\right)\right]$$

$$\phi_2 = \sin^{-1}\left[\frac{\varepsilon}{\varepsilon_1}\sin(\phi)\right]$$

$$\phi_3 = \frac{2\pi}{3} - \sin^{-1}\left[\frac{\varepsilon}{\varepsilon_1}\sin\left(\frac{\pi}{3} + \phi\right)\right]$$

$\bar{\varepsilon}_i = \varepsilon_i(1 - \delta)$,i=1,2,3 and $\bar{h} = \frac{h}{c}$

The fluid film thickness in non-dimensional form is given by

$\bar{h}_i = 1 + \bar{\varepsilon}_i \cos(\theta - \emptyset_i)$, i=1,2,3

Here initially attitude angle is assumed and calculated by taking any value of eccentricity ratio from[4]

$$\emptyset = \tan^{-1}\left[\frac{\pi}{4}\frac{\sqrt{1-\varepsilon^2}}{\varepsilon}\right]$$

For calculation of pressure modified Reynolds equation is written in the following form [3]

$$\left(\frac{1}{R^2}\right)\frac{\partial}{\partial\theta}\left[\left(h^3/12\eta\right)\frac{\partial P}{\partial\theta}\right] + \frac{\partial}{\partial Z}\left[\left(h^3/12\eta\right)\frac{\partial P}{\partial Z}\right] = (\omega/2)\left(\frac{\partial h}{\partial\theta}\right) + \frac{\partial h}{\partial t}$$

Where R is journal radius, ω is angular velocity, h is film thickness, η is dynamic viscosity.For static equilibrium position and small displacement the film thickness becomes

h=ho+$\Delta x sin\theta + \Delta y cos\theta$

Where minimum film thickness ho=c+e.cos$(\theta - \emptyset)$, θis circumferential angle, e is eccentricity, c is radial clearance. For small amplitude pressure can be written as

P=Po+Px. Δx+Py. Δy+P$\dot{x}$. $\Delta\dot{x}$+P$\dot{y}$. $\Delta\dot{y}$

On substituting h and P in Reynolds equation five equations can be obtained which will give the pressure profile in bearing. The reaction forces in the film can be obtained by integrating the pressure and so the stiffness & damping values.

IV. RESULTS

For theoretical calculation Diameter of journal is taken as 39.96mm, length of bearing as 40mm, radial clearance(c) as 0.0925mm Speed of range 1000-4000rpm, and load in -y direction on second lobe.

Solving for film thickness of each lobe in three-lobe journal bearing the profile obtained at eccentricity ratio = 0.8 are

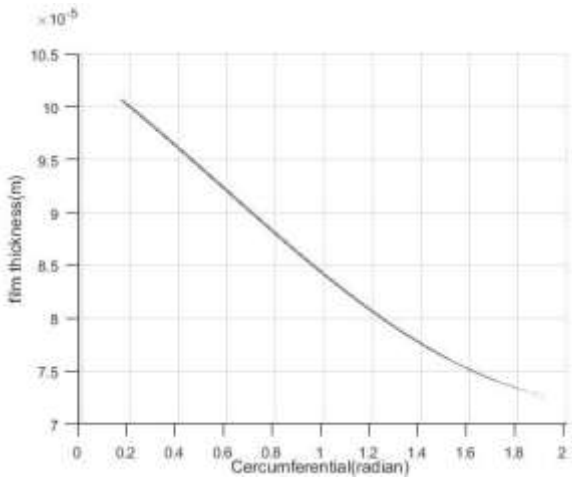

Fig.2 Film thickness, lobe 1, ε=0.8

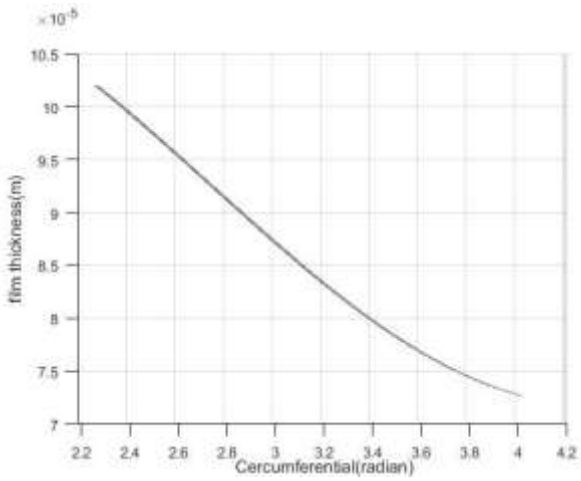

Fig.3 Film thickness, lobe 2, ε=0.8

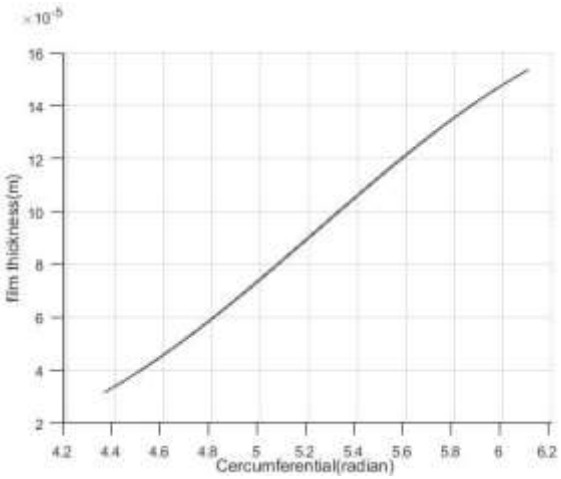

Fig.4 Film thickness, lobe 3, ε=0.8

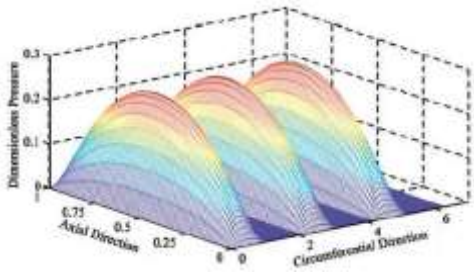

Fig.5 Dimensionless pressure distribution for three lobe journal bearing

These profiles are verified with the result obtained in [6].

Furtherthe pressure profile can be obtained theoretically from Reynolds equation which would be validated with the following profiles in fig.5 obtained from Fourier analysis [9] and also to be verified from the analysis in Ansys workbench and experimentation.

Similarly the stiffness and Damping coefficients obtained by integrating reaction forces in x and y direction would be validated by data from Lund & Thomsen [5] and Dr. B S Prabhu [3] and also to be verified from the analysis in Ansys workbench and experimentation.

Assuming each lobe as individual and circumferential coordinates from 10º to 110º, 130º to 230º and 250º to 350º for first, second and third lobe respectively the film thickness, and pressure can be obtained.

V. CONCLUSIONS

1. Filmthickness profiles are obtained from the theoretical calculation shows the probable location of maximum pressure in each lobe at the point of minimum film thickness.
2. The analytical, theoretical and experimental values of pressure distribution and maximum pressure will be compared in this study.
3. The dynamic characteristics, stiffness and damping coefficients is to be determined for different rpm and eccentricity ratios to be verified from the previously produced results from [3],[5] and experimental data obtained.

REFERENCES

1) Boualem Chetti (2014), Stability analysis of three-lobe journal bearing lubricated with Micropolar Fluids, *International Journal of chemical, Molecular, Nuclear, Materials and Metallurgical Engineering,* Vol. No. 8 (12) Page no. 1429-1434.
2) Boualem Chetti (2011), Static and dynamic analysis of hydrodynamic four-lobe journal bearing with couple stress lubrication, *Jordon Journal of Mechanical and Industrial Engineering,* Vol. No 5(1). Page No. 23-28.
3) Dr. B. S. Prabhu, Self-acting bearings-Design, application and stability.
4) Dr. Luis San Anders (2010), Dynamics of rigid rotor – fluid film bearing system.
5) J. W. Lund and K. K. Thomsen (1982), a calculation method and data for the dynamic coefficients of oil lubricated journal bearings, *Dyrobe.*
6) David V. Taylor, Gregory j. Kostrzewsky, Lioyd E. Barrett & Ronald D. Flack (2008), Measured performance of highly preloaded three - lobe journal bearing — part I : Static Characteristics, *Tribology Transactions,* Vol. No.38:3 Page No. 507-516.
7) David V. Taylor, Gregory j. Kostrzewsky, Lioyd E. Barrett & Ronald D. Flack (2008), Measured performance of highly preloaded three-lobe journal bearing—part II: Dynamic Characteristics, *Tribology Transactions,* Vol. No.38:3 Page No. 707-713.
8) C. Bhagat, L. Roy (2014), Steady state thermo-Hydrodynamic analysis of two-axial groove and Multilobe hydrodynamic bearings,*Tribology in industry,* Vol. No.4 Page No.475-487.
9) Zhi Li, Lihua Yang, Jian Zhou and Lie Yu (2014), Pressure distribution for multi-lobe bearings using Fourier analysis, journal of Engineering Tribology, Vol. No 229(5). Page No. 624-635.

